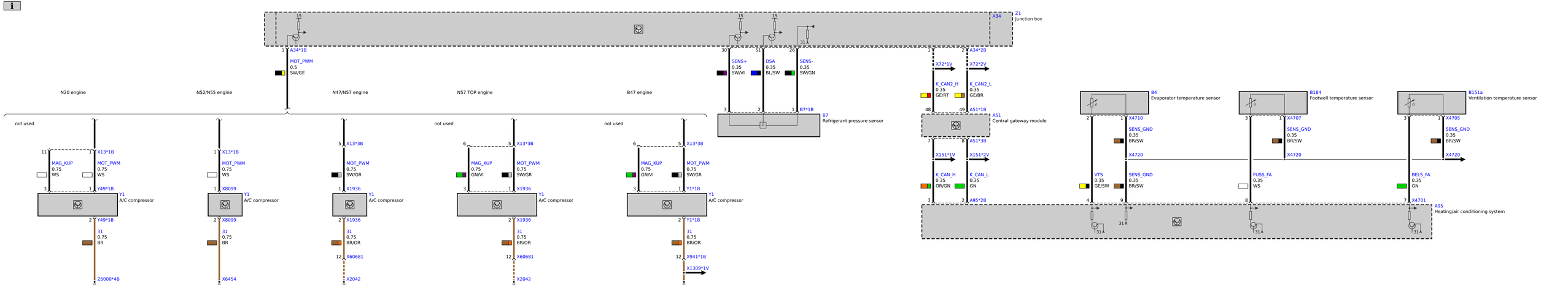
Z1
Junction box
A34
15
1 A34*1B
MOT_PWM
0.5
SW/GE
30 SENS+
0.35
SW/VI
51 DSA
0.35
BL/SW
26 SENS-
0.35
SW/GN
31
3 2 1 B7*1B
B7
Refrigerant pressure sensor
1 X72*1V
2 X72*2V
A34*2B
K_CAN2_H
0.35
GE/RT
K_CAN2_L
0.35
GE/BR
48 49 A51*1B
A51
Central gateway module
7 8 A51*3B
X151*1V
X151*2V
K_CAN_H
0.35
OR/GN
K_CAN_L
0.35
GN
3 2 A95*2B
A95
Heating/air conditioning system
B4
Evaporator temperature sensor
B184
Footwell temperature sensor
B151a
Ventilation temperature sensor
X4710
X4705
X4701
SENS_GND
0.35
BR/SW
X4720
VTS
0.35
GE/SW
FUSS_FA
0.35
WS
BELS_FA
0.35
GN
N20 engine
N52/N55 engine
N47/N57 engine
N57 TOP engine
B47 engine
not used
11 1 X13*1B
MAG_KUP
0.75
WS
MOT_PWM
0.75
WS
3 1 Y49*1B
Y1
A/C compressor
2 Y49*1B
31
0.75
BR
Z6000*4B
1 X13*1B
MOT_PWM
0.75
WS
1 X8099
2 X8099
X6454
5 X13*3B
MOT_PWM
0.75
SW/GR
1 X1936
2 X1936
31
0.75
BR/OR
12 X60681
X2042
6 5 X13*3B
MAG_KUP
0.75
GN/VI
MOT_PWM
0.75
SW/GR
3 1 X1936
2 X1936
31
0.75
BR/OR
12 X60681
X2042
6 5 X13*3B
MAG_KUP
0.75
GN/VI
MOT_PWM
0.75
SW/GR
3 1 Y1*1B
2 Y1*1B
31
0.75
BR/OR
12 X941*1B
X1309*1V