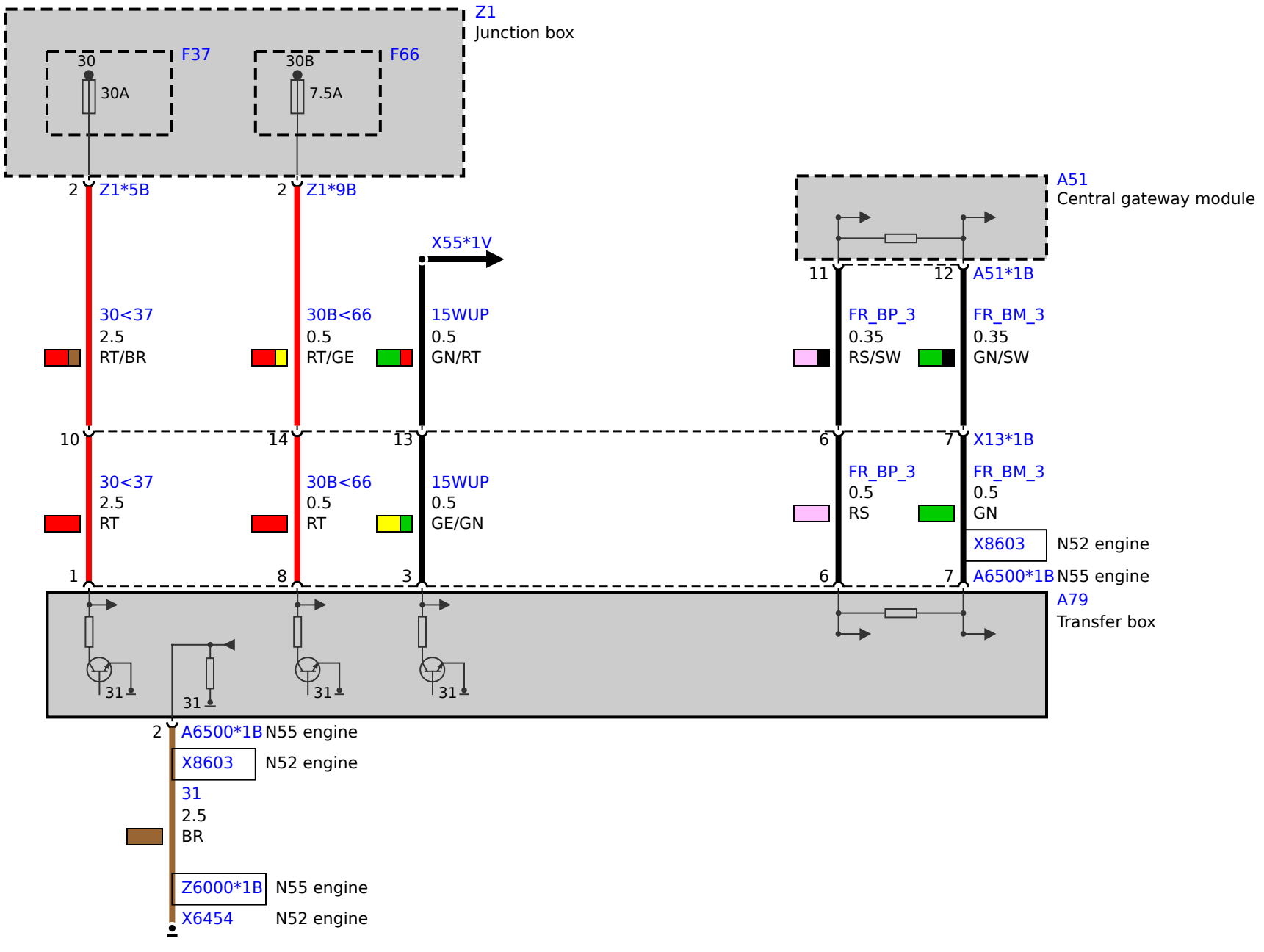
Z1
Junction box
30
F37
30A
30B
F66
7.5A
2
Z1*5B
2
Z1*9B
X55*1V
A51
Central gateway module
11
12
A51*1B
30<37
2.5
RT/BR
30B<66
0.5
RT/GE
15WUP
0.5
GN/RT
FR_BP_3
0.35
RS/SW
FR_BM_3
0.35
GN/SW
10
14
13
6
7
X13*1B
30<37
2.5
RT
30B<66
0.5
RT
15WUP
0.5
GE/GN
FR_BP_3
0.5
RS
FR_BM_3
0.5
GN
X8603
N52 engine
1
8
3
6
7
A6500*1B
N55 engine
A79
Transfer box
31
31
31
31
2
A6500*1B
N55 engine
X8603
N52 engine
31
2.5
BR
Z6000*1B
N55 engine
X6454
N52 engine