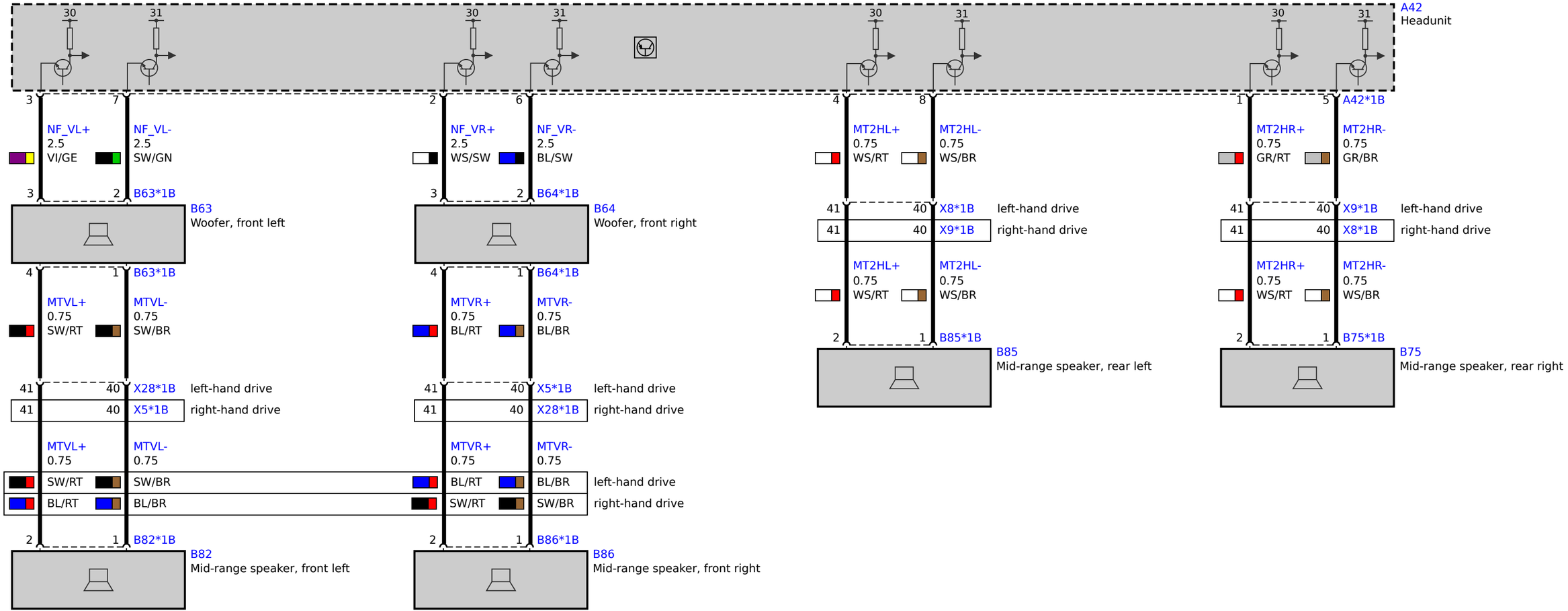
A42
Headunit
30
31
NF_VL+
2.5
VI/GE
NF_VL-
2.5
SW/GN
B63*1B
B63
Woofer, front left
NF_VR+
2.5
WS/SW
NF_VR-
2.5
BL/SW
B64*1B
B64
Woofer, front right
MT2HL+
0.75
WS/RT
MT2HL-
0.75
WS/BR
X8*1B
left-hand drive
X9*1B
right-hand drive
B85*1B
B85
Mid-range speaker, rear left
MT2HR+
0.75
GR/RT
MT2HR-
0.75
GR/BR
A42*1B
X9*1B
left-hand drive
X8*1B
right-hand drive
MT2HR+
0.75
WS/RT
MT2HR-
0.75
WS/BR
B75*1B
B75
Mid-range speaker, rear right
MTVL+
0.75
SW/RT
MTVL-
0.75
SW/BR
B63*1B
X28*1B
left-hand drive
X5*1B
right-hand drive
MTVL+
0.75
SW/RT
MTVL-
0.75
SW/BR
BL/RT
BL/BR
B82*1B
B82
Mid-range speaker, front left
MTVR+
0.75
BL/RT
MTVR-
0.75
BL/BR
B64*1B
X5*1B
left-hand drive
X28*1B
right-hand drive
MTVR+
0.75
BL/RT
MTVR-
0.75
BL/BR
SW/RT
SW/BR
B86*1B
B86
Mid-range speaker, front right