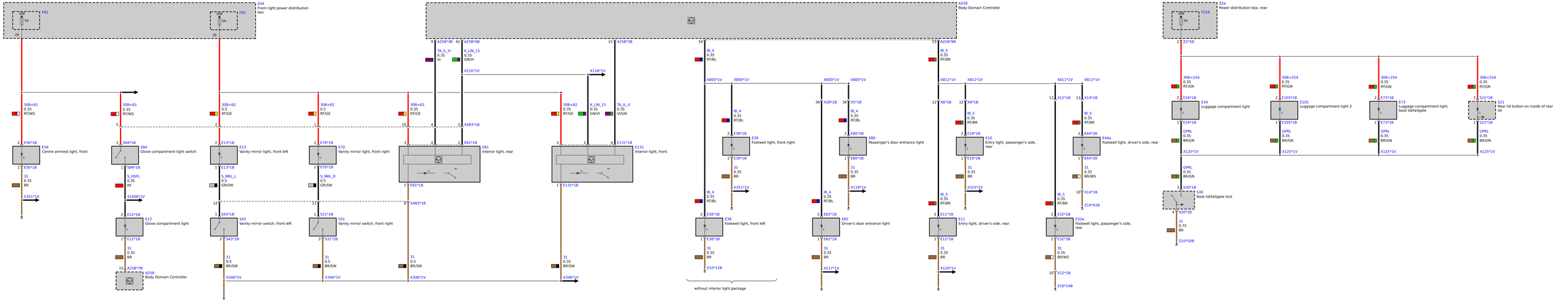
Z44
Front right power distribution box
F61
5A
F62
5A
A258
Body Domain Controller
30B<61
0.35
RT/WS
30B<62
0.5
RT/GE
TA_IL_H
0.35
VI
A258*4B
K_LIN_15
0.35
GN/VI
A258*1B
TA_IL_V
0.35
VI/GN
X116*1V
X483*1B
E56
Centre armrest light, front
E56*1B
31
0.35
BR
X351*1V
S94
Glove compartment light switch
S94*1B
S_HSFL
0.35
RT
X160*1V
E12
Glove compartment light
E12*1B
A258*7B
E13
Vanity mirror light, front left
E13*1B
S_MKL_L
0.5
GR/SW
S43
Vanity mirror switch, front left
S43*1B
31
0.5
BR/SW
X346*1V
E70
Vanity mirror light, front right
E70*1B
S_MKL_R
0.5
GR/SW
S31
Vanity mirror switch, front right
S31*1B
E81
Interior light, rear
E81*1B
E131
Interior light, front
E131*1B
IB_4
0.35
RT/BL
X800*1V
E39
Footwell light, front right
E39*1B
X351*1V
E38
Footwell light, front left
E38*1B
Z10*11B
without interior light package
X28*1B
X5*1B
E80
Passenger's door entrance light
E80*1B
X119*1V
E82
Driver's door entrance light
E82*1B
X117*1V
IB_5
0.35
RT/BR
X811*1V
X49*1B
X8*1B
X10*1B
E10
Entry light, passenger's side, rear
E10*1B
X315*1V
E11
Entry light, driver's side, rear
E11*1B
X120*1V
X12*1B
X14*1B
E44
Footwell light, driver's side, rear
E44*2B
X14*1B
Z10*41B
E32
Footwell light, passenger's side, rear
E32*2B
X12*1B
Z10*14B
Z2
Power distribution box, rear
F254
5A
Z2*1B
E34
Luggage compartment light
E34*1B
GPRL
0.35
BR/GN
X125*1V
E105
Luggage compartment light 2
E105*1B
E73
Luggage compartment light, boot lid/tailgate
E73*1B
S21
Rear lid button on inside of rear lid
S21*1B
S30
Boot lid/tailgate lock
S30*1B
Z10*50B