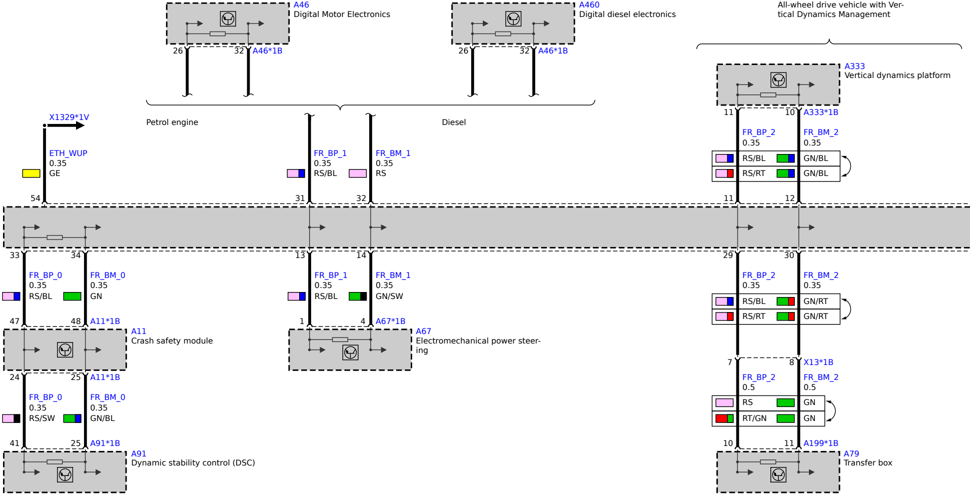
A46
Digital Motor Electronics
26
32
A46*1B
A460
Digital diesel electronics
26
32
A46*1B
All-wheel drive vehicle with Vertical Dynamics Management
A333
Vertical dynamics platform
11
10
A333*1B
Petrol engine
Diesel
X1329*1V
ETH_WUP
0.35
GE
54
FR_BP_1
0.35
RS/BL
31
FR_BM_1
0.35
RS
32
FR_BP_2
0.35
RS/BL
RS/RT
11
FR_BM_2
0.35
GN/BL
GN/BL
12
33
34
13
14
29
30
FR_BP_0
0.35
RS/BL
FR_BM_0
0.35
GN
47
48
A11*1B
FR_BP_1
0.35
RS/BL
FR_BM_1
0.35
GN/SW
1
4
A67*1B
FR_BP_2
0.35
RS/BL
RS/RT
FR_BM_2
0.35
GN/RT
GN/RT
A11
Crash safety module
A67
Electromechanical power steering
24
25
A11*1B
7
8
X13*1B
FR_BP_0
0.35
RS/SW
FR_BM_0
0.35
GN/BL
FR_BP_2
0.5
RS
RT/GN
FR_BM_2
0.5
GN
GN
41
25
A91*1B
10
11
A199*1B
A91
Dynamic stability control (DSC)
A79
Transfer box

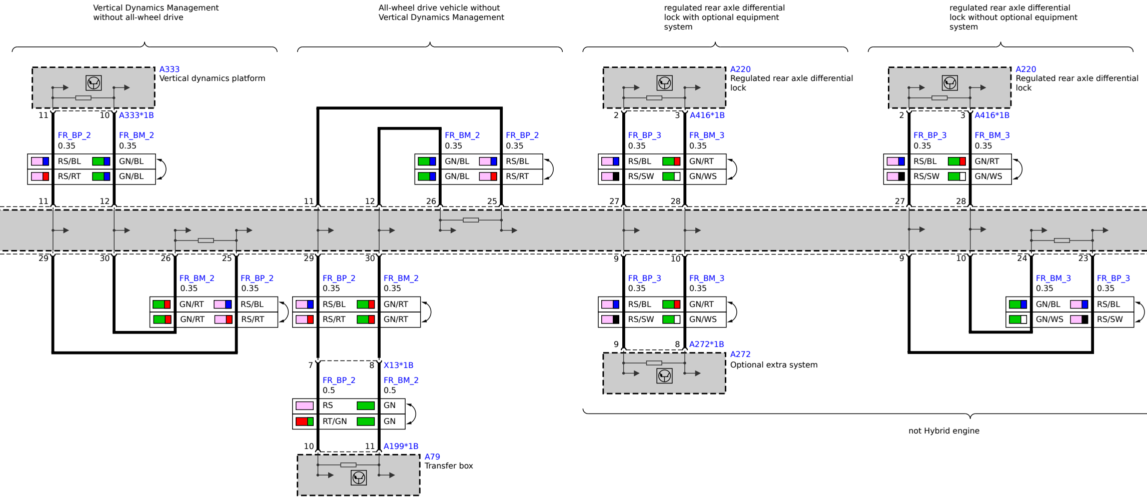
Vertical Dynamics Management without all-wheel drive
All-wheel drive vehicle without Vertical Dynamics Management
regulated rear axle differential lock with optional equipment system
regulated rear axle differential lock without optional equipment system
A333
Vertical dynamics platform
A333*1B
11
10
FR_BP_2
0.35
FR_BM_2
0.35
RS/BL
GN/BL
RS/RT
GN/BL
11
12
29
30
26
25
FR_BM_2
0.35
FR_BP_2
0.35
GN/RT
RS/BL
GN/RT
RS/RT
11
12
26
25
FR_BM_2
0.35
FR_BP_2
0.35
GN/BL
RS/BL
GN/BL
RS/RT
29
30
FR_BP_2
0.35
FR_BM_2
0.35
RS/BL
GN/RT
RS/RT
GN/RT
7
8
X13*1B
FR_BP_2
0.5
FR_BM_2
0.5
RS
GN
RT/GN
GN
10
11
A199*1B
A79
Transfer box
A220
Regulated rear axle differential lock
2
3
A416*1B
FR_BP_3
0.35
FR_BM_3
0.35
RS/BL
GN/RT
RS/SW
GN/WS
27
28
9
10
FR_BP_3
0.35
FR_BM_3
0.35
RS/BL
GN/RT
RS/SW
GN/WS
9
8
A272*1B
A272
Optional extra system
A220
Regulated rear axle differential lock
2
3
A416*1B
FR_BP_3
0.35
FR_BM_3
0.35
RS/BL
GN/RT
RS/SW
GN/WS
27
28
9
10
24
23
FR_BM_3
0.35
FR_BP_3
0.35
GN/BL
RS/BL
GN/WS
RS/SW
not Hybrid engine

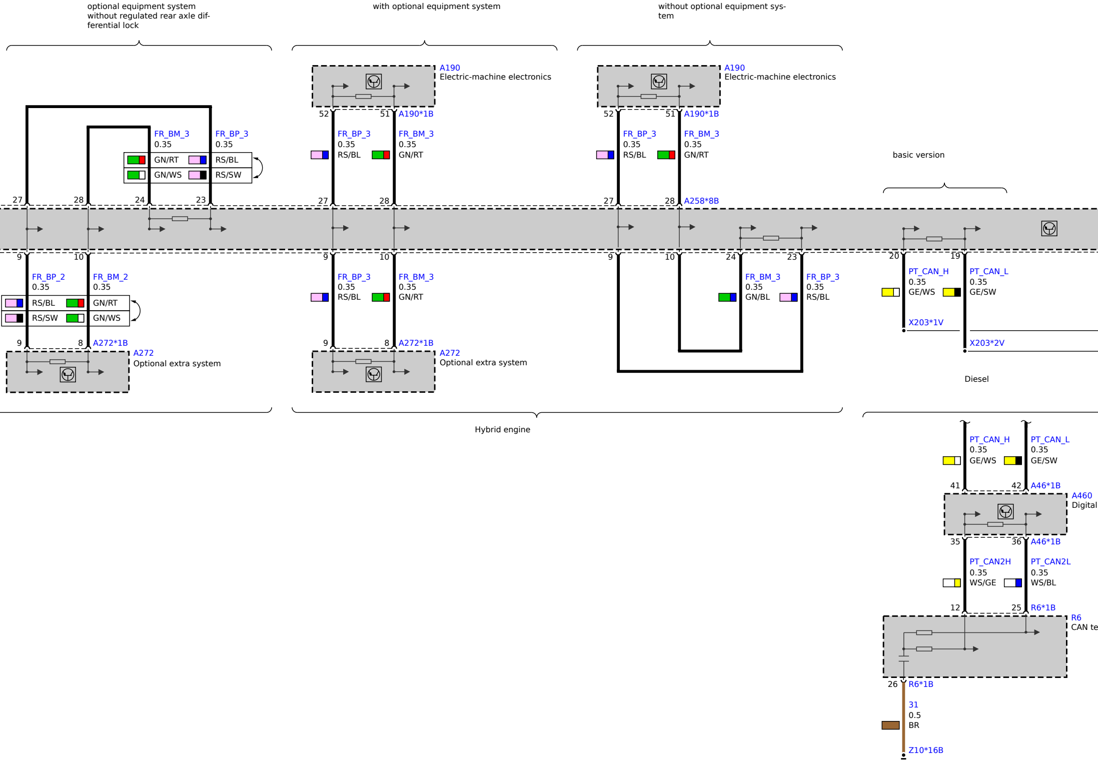
optional equipment system without regulated rear axle differential lock
with optional equipment system
without optional equipment system
A190
Electric-machine electronics
A190
Electric-machine electronics
52
51
A190*1B
52
51
A190*1B
FR_BM_3
0.35
FR_BP_3
0.35
GN/RT
RS/BL
GN/WS
RS/SW
FR_BP_3
0.35
RS/BL
FR_BM_3
0.35
GN/RT
FR_BP_3
0.35
RS/BL
FR_BM_3
0.35
GN/RT
basic version
27
28
24
23
27
28
27
28
A258*8B
9
10
9
10
9
10
24
23
20
19
FR_BP_2
0.35
FR_BM_2
0.35
RS/BL
GN/RT
RS/SW
GN/WS
FR_BP_3
0.35
RS/BL
FR_BM_3
0.35
GN/RT
FR_BM_3
0.35
GN/BL
FR_BP_3
0.35
RS/BL
PT_CAN_H
0.35
GE/WS
PT_CAN_L
0.35
GE/SW
X203*1V
X203*2V
9
8
A272*1B
9
8
A272*1B
A272
Optional extra system
A272
Optional extra system
Diesel
Hybrid engine
PT_CAN_H
0.35
GE/WS
PT_CAN_L
0.35
GE/SW
41
42
A46*1B
A460
Digital
35
36
A46*1B
PT_CAN2H
0.35
WS/GE
PT_CAN2L
0.35
WS/BL
12
25
R6*1B
R6
CAN te
26
R6*1B
31
0.5
BR
Z10*16B

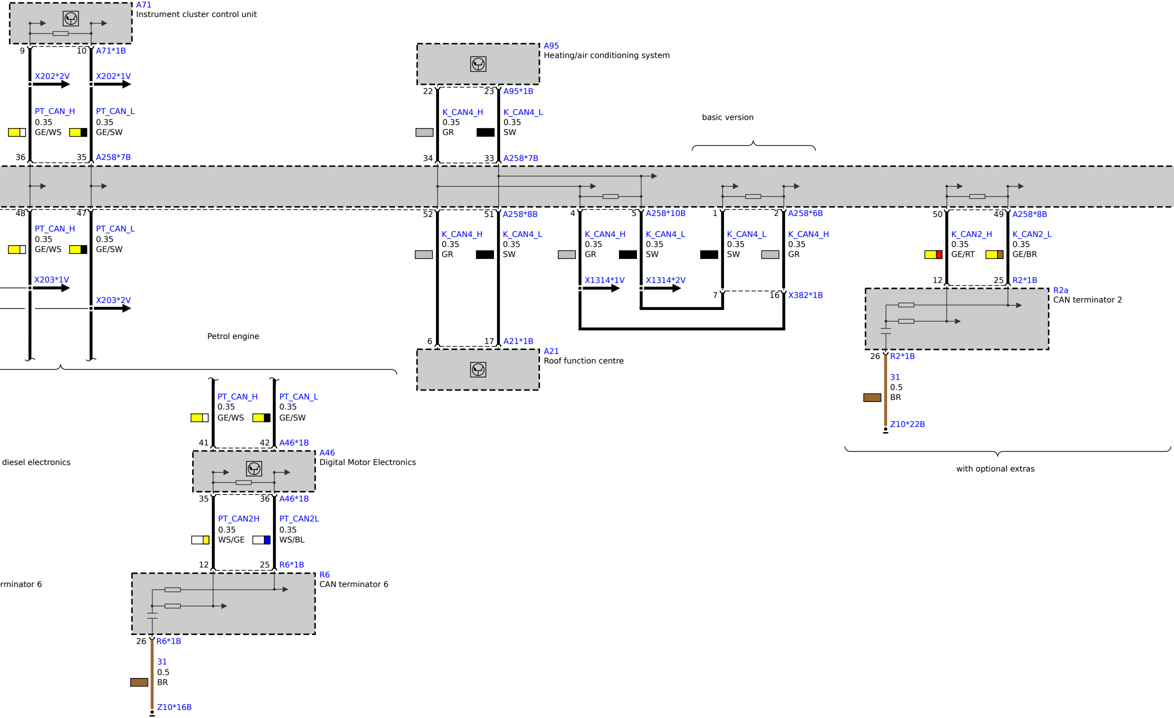
A71
Instrument cluster control unit
9
10
A71*1B
X202*2V
X202*1V
PT_CAN_H
0.35
GE/WS
PT_CAN_L
0.35
GE/SW
36
35
A258*7B
A95
Heating/air conditioning system
22
23
A95*1B
K_CAN4_H
0.35
GR
K_CAN4_L
0.35
SW
34
33
A258*7B
basic version
48
47
PT_CAN_H
0.35
GE/WS
PT_CAN_L
0.35
GE/SW
X203*1V
X203*2V
Petrol engine
52
51
A258*8B
K_CAN4_H
0.35
GR
K_CAN4_L
0.35
SW
6
17
A21*1B
A21
Roof function centre
4
5
A258*10B
K_CAN4_H
0.35
GR
K_CAN4_L
0.35
SW
X1314*1V
X1314*2V
1
2
A258*6B
K_CAN4_L
0.35
SW
K_CAN4_H
0.35
GR
7
16
X382*1B
50
49
A258*8B
K_CAN2_H
0.35
GE/RT
K_CAN2_L
0.35
GE/BR
12
25
R2*1B
R2a
CAN terminator 2
26
R2*1B
31
0.5
BR
Z10*22B
with optional extras
PT_CAN_H
0.35
GE/WS
PT_CAN_L
0.35
GE/SW
41
42
A46*1B
diesel electronics
A46
Digital Motor Electronics
35
36
A46*1B
PT_CAN2H
0.35
WS/GE
PT_CAN2L
0.35
WS/BL
12
25
R6*1B
R6
CAN terminator 6
rminator 6
26
R6*1B
31
0.5
BR
Z10*16B

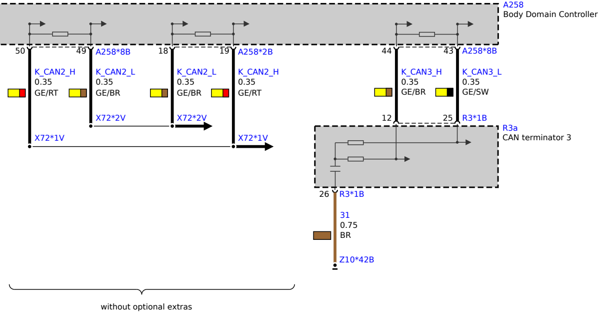
A258
Body Domain Controller
50
49
A258*8B
18
19
A258*2B
44
43
A258*8B
K_CAN2_H
0.35
GE/RT
K_CAN2_L
0.35
GE/BR
K_CAN2_L
0.35
GE/BR
K_CAN2_H
0.35
GE/RT
K_CAN3_H
0.35
GE/BR
K_CAN3_L
0.35
GE/SW
X72*2V
X72*2V
X72*1V
X72*1V
12
25
R3*1B
R3a
CAN terminator 3
26
R3*1B
31
0.75
BR
Z10*42B
without optional extras