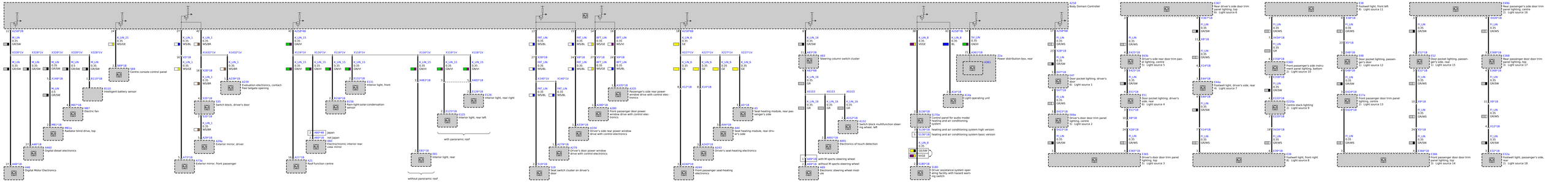
A250 Body Domain Controller
A1 Digital Motor Electronics
A460 Digital diesel electronics
M87 Electric fan
M81*1B Radiator blind drive, top
B110 Intelligent battery sensor
S69 Centre console control panel
S25 Switch block, driver's door
A29a Exterior mirror, driver
A27a Exterior mirror, front passenger
A60 Electrochromic interior rear view mirror
A21 Roof function centre
A239 Evaluation electronics, contactless tailgate opening
B131 Interior light, front
B136 Rain-light-solar-condensation sensor
B3 Interior light, rear
B125 Interior light, rear left
B126 Interior light, rear right
with panoramic roof
without panoramic roof
A519 Seat switch cluster on driver's door
A279 Driver's door power window drive with control electronics
A280 Front passenger door power window drive with control electronics
A335 Passenger's side rear power window drive with control electronics
A334 Driver's side rear power window drive with control electronics
A603 Steering column switch cluster
A691 Electronics of touch detection
A69 Electronic steering wheel module
A65 Seat heating module, rear passenger's side
A64 Seat heating module, rear driver's side
A243 Driver's seat-heating electronics
A244 Front passenger seat-heating electronics
A152 Switch block multifunction steering wheel, left
A170a Control panel for audio model
Heating and air-conditioning system
heating and air conditioning system high version
heating and air conditioning system basic version
with M sports steering wheel
without M sports steering wheel
A180 Driver assistance system operability with hazard warning switch
Z2a Power distribution box, rear
A361
A14a Light operating unit
A367 Rear driver's side door trim panel lighting, top
61 Light source 6
E63b Driver's side rear door trim panel lighting, top
51 Light source 5
E51 Door pocket lighting, driver's side, rear
40 Light source 4
E47 Door pocket lighting, driver's door
31 Light source 1
E44a Footwell light, driver's side, rear
41 Light source 7
E365 Driver's door door trim panel lighting, top
51 Light source 3
E38 Footwell light, front left
31 Light source 11
E48 Door pocket lighting, passenger's side
32 Light source 12
E17a Front passenger door trim panel lighting, centre
37 Light source 13
E44*1B Footwell light, driver's side, rear
E220a Central stack lighting
31 Light source 9
E366 Rear passenger door door trim panel lighting, top
52 Light source 14
E39 Footwell light, front right
40 Light source 8
E49b Rear passenger's side door trim panel lighting, centre
33 Light source 16
E368 Rear passenger door door trim panel lighting, top
53 Light source 17
E52 Door pocket lighting, passenger's side
35 Light source 15
E52*1B Footwell light, passenger's side, rear
21 Light source 18
K_LIN_1 0.35 GR/SW
K_LIN_21 0.35 WS/GE
K_LIN_15 0.35 GN/VI
K_LIN_16 0.35 GR
K_LIN_6 0.35 GE
K_LIN_8 0.35 WS/GE
K_LIN_8 0.35 BL
P_LIN 0.35 GR/SW
P_LIN 0.35 GR/WS
P_LIN 0.35 GR/VI
P_LIN 0.35 GR/GN
P_LIN 0.35 GR/GE
P_LIN 0.35 GR/BL
P_LIN 0.35 GR/WS/VI
P_LIN 0.35 GR/WS/GN
P_LIN 0.35 GR/WS/GE
P_LIN 0.35 GR/WS/BL
P_LIN 0.35 GR/WS/GE/BL
P_LIN 0.35 GR/WS/GN/VI
P_LIN 0.35 GR/WS/GN/GE
P_LIN 0.35 GR/WS/GN/BL
P_LIN 0.35 GR/WS/GE/BL
P_LIN 0.35 GR/WS/GN/VI/GE
P_LIN 0.35 GR/WS/GN/VI/BL
P_LIN 0.35 GR/WS/GN/GE/BL
P_LIN 0.35 GR/WS/GN/VI/GE/BL
P_LIN 0.35 GR/WS/GN/VI/GE/BL
P_LIN 0.35 GR/WS/GN/VI