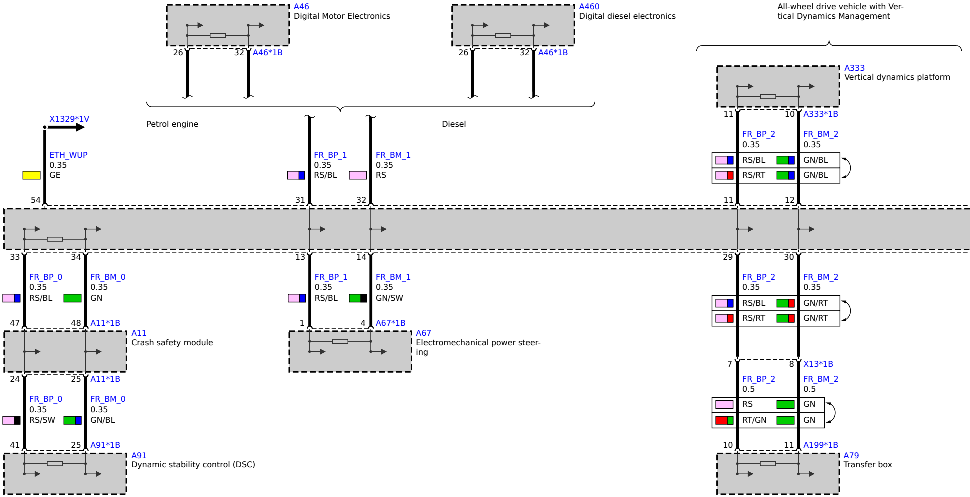
A46
Digital Motor Electronics
26
32
A46*1B
A460
Digital diesel electronics
26
32
A46*1B
All-wheel drive vehicle with Vertical Dynamics Management
A333
Vertical dynamics platform
11
10
A333*1B
Petrol engine
Diesel
X1329*1V
ETH_WUP
0.35
GE
54
FR_BP_1
0.35
RS/BL
31
FR_BM_1
0.35
RS
32
FR_BP_2
0.35
RS/BL
RS/RT
FR_BM_2
0.35
GN/BL
GN/BL
11
12
33
34
13
14
29
30
FR_BP_0
0.35
RS/BL
FR_BM_0
0.35
GN
47
48
A11*1B
A11
Crash safety module
24
25
A11*1B
FR_BP_0
0.35
RS/SW
FR_BM_0
0.35
GN/BL
41
25
A91*1B
A91
Dynamic stability control (DSC)
FR_BP_1
0.35
RS/BL
FR_BM_1
0.35
GN/SW
1
4
A67*1B
A67
Electromechanical power steering
FR_BP_2
0.35
RS/BL
RS/RT
FR_BM_2
0.35
GN/RT
GN/RT
7
8
X13*1B
FR_BP_2
0.5
RS
RT/GN
FR_BM_2
0.5
GN
GN
10
11
A199*1B
A79
Transfer box

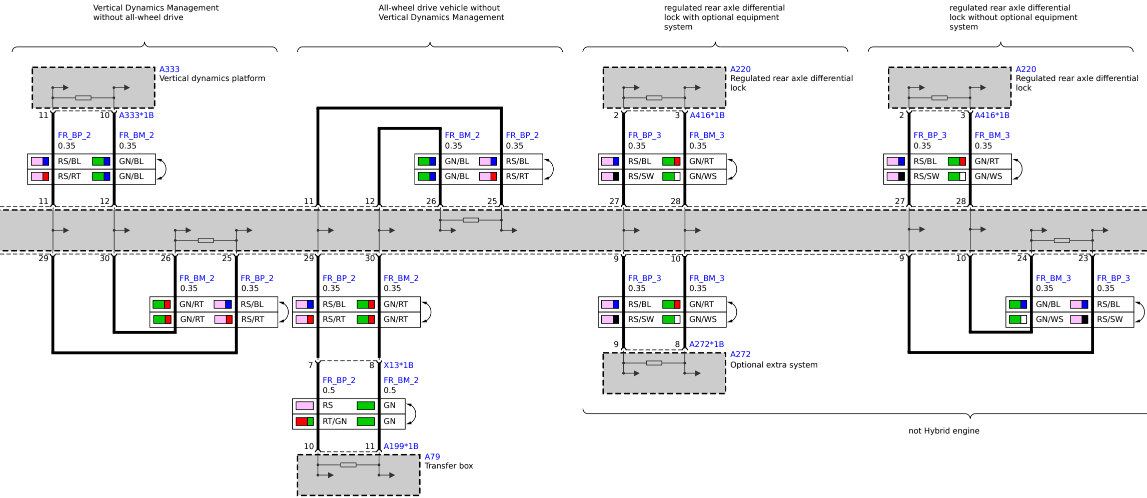
Vertical Dynamics Management without all-wheel drive
All-wheel drive vehicle without Vertical Dynamics Management
regulated rear axle differential lock with optional equipment system
regulated rear axle differential lock without optional equipment system
A333
Vertical dynamics platform
11
10
A333*1B
FR_BP_2
0.35
FR_BM_2
0.35
RS/BL
GN/BL
RS/RT
GN/BL
11
12
29
30
26
25
FR_BM_2
0.35
FR_BP_2
0.35
GN/RT
RS/BL
GN/RT
RS/RT
11
12
26
25
FR_BM_2
0.35
FR_BP_2
0.35
GN/BL
RS/BL
GN/BL
RS/RT
29
30
FR_BP_2
0.35
FR_BM_2
0.35
RS/BL
GN/RT
RS/RT
GN/RT
7
8
X13*1B
FR_BP_2
0.5
FR_BM_2
0.5
RS
GN
RT/GN
GN
10
11
A199*1B
A79
Transfer box
A220
Regulated rear axle differential lock
2
3
A416*1B
FR_BP_3
0.35
FR_BM_3
0.35
RS/BL
GN/RT
RS/SW
GN/WS
27
28
9
10
FR_BP_3
0.35
FR_BM_3
0.35
RS/BL
GN/RT
RS/SW
GN/WS
9
8
A272*1B
A272
Optional extra system
A220
Regulated rear axle differential lock
2
3
A416*1B
FR_BP_3
0.35
FR_BM_3
0.35
RS/BL
GN/RT
RS/SW
GN/WS
27
28
9
10
24
23
FR_BM_3
0.35
FR_BP_3
0.35
GN/BL
RS/BL
GN/WS
RS/SW
not Hybrid engine

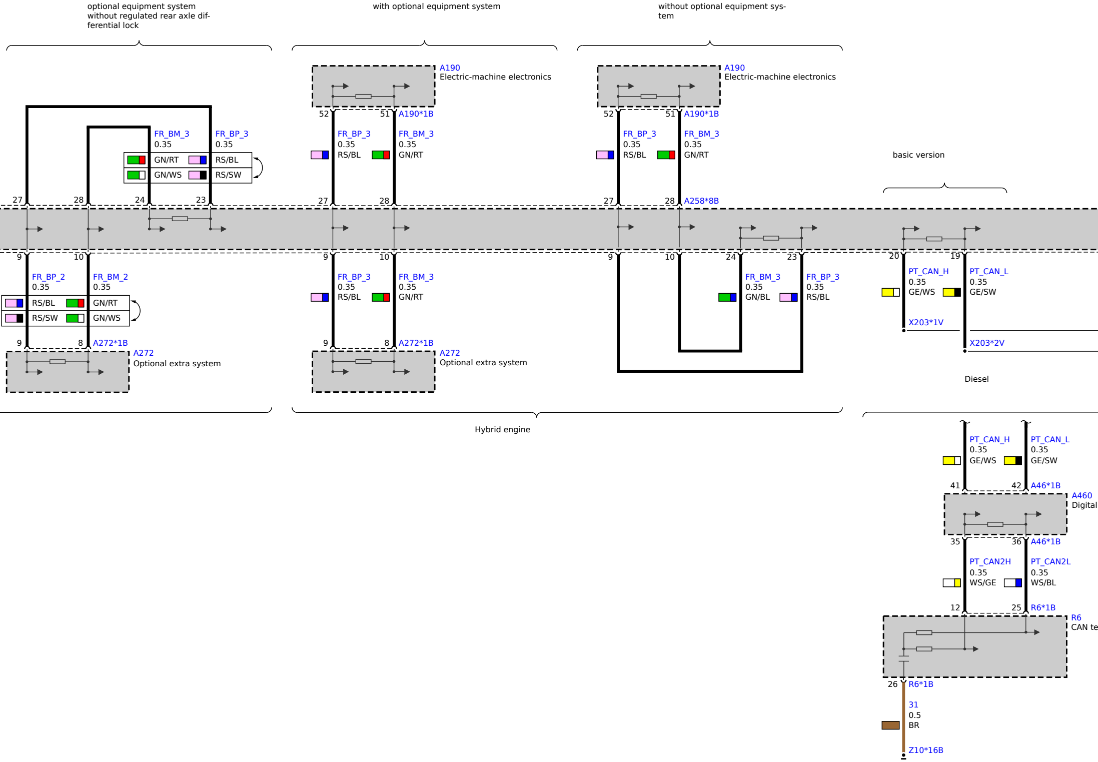
optional equipment system without regulated rear axle differential lock
with optional equipment system
without optional equipment system
A190
Electric-machine electronics
A190
Electric-machine electronics
52
51
A190*1B
52
51
A190*1B
FR_BM_3
0.35
FR_BP_3
0.35
GN/RT
RS/BL
GN/WS
RS/SW
FR_BP_3
0.35
RS/BL
FR_BM_3
0.35
GN/RT
FR_BP_3
0.35
RS/BL
FR_BM_3
0.35
GN/RT
basic version
27
28
24
23
27
28
27
28
A258*8B
9
10
9
10
9
10
24
23
20
19
FR_BP_2
0.35
FR_BM_2
0.35
RS/BL
GN/RT
RS/SW
GN/WS
FR_BP_3
0.35
RS/BL
FR_BM_3
0.35
GN/RT
FR_BM_3
0.35
GN/BL
FR_BP_3
0.35
RS/BL
PT_CAN_H
0.35
GE/WS
PT_CAN_L
0.35
GE/SW
X203*1V
X203*2V
9
8
A272*1B
9
8
A272*1B
A272
Optional extra system
A272
Optional extra system
Diesel
Hybrid engine
PT_CAN_H
0.35
GE/WS
PT_CAN_L
0.35
GE/SW
41
42
A46*1B
A460
Digital
35
36
A46*1B
PT_CAN2H
0.35
WS/GE
PT_CAN2L
0.35
WS/BL
12
25
R6*1B
R6
CAN te
26
R6*1B
31
0.5
BR
Z10*16B

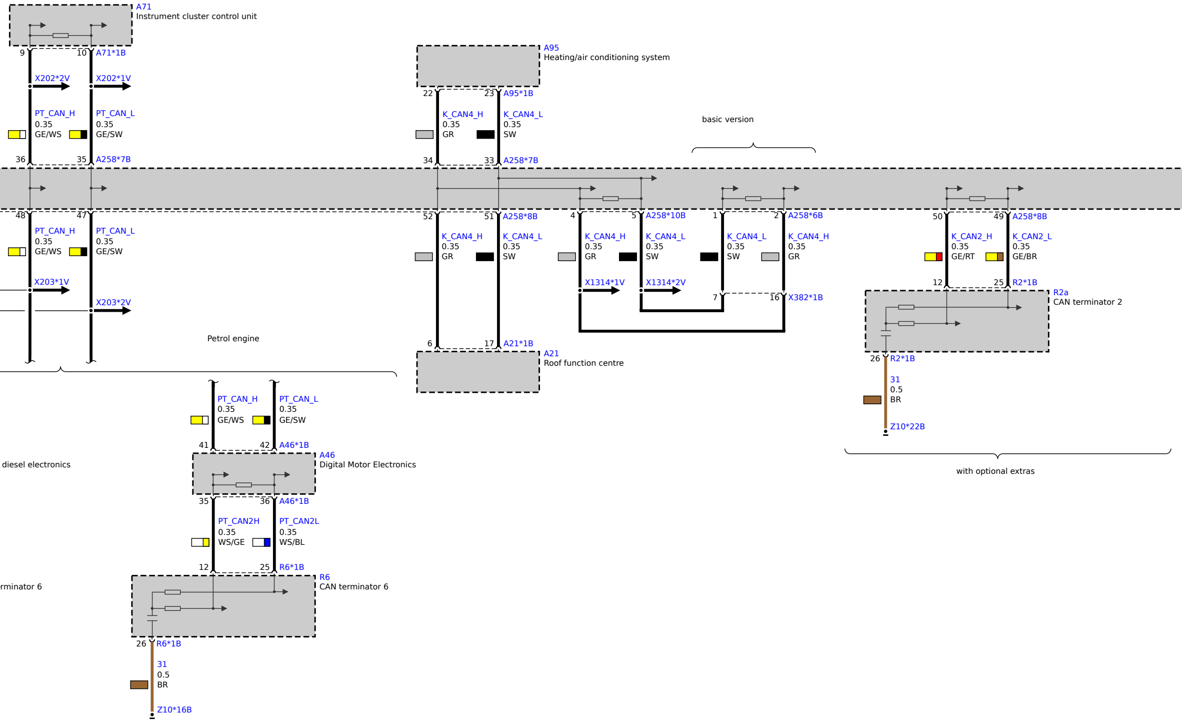
A71
Instrument cluster control unit
9
10
A71*1B
X202*2V
X202*1V
PT_CAN_H
0.35
GE/WS
PT_CAN_L
0.35
GE/SW
36
35
A258*7B
48
47
PT_CAN_H
0.35
GE/WS
PT_CAN_L
0.35
GE/SW
X203*1V
X203*2V
Petrol engine
diesel electronics
PT_CAN_H
0.35
GE/WS
PT_CAN_L
0.35
GE/SW
41
42
A46*1B
A46
Digital Motor Electronics
35
36
A46*1B
PT_CAN2H
0.35
WS/GE
PT_CAN2L
0.35
WS/BL
12
25
R6*1B
R6
CAN terminator 6
rminator 6
26
R6*1B
31
0.5
BR
Z10*16B
A95
Heating/air conditioning system
22
23
A95*1B
K_CAN4_H
0.35
GR
K_CAN4_L
0.35
SW
34
33
A258*7B
52
51
A258*8B
K_CAN4_H
0.35
GR
K_CAN4_L
0.35
SW
6
17
A21*1B
A21
Roof function centre
basic version
4
5
A258*10B
K_CAN4_H
0.35
GR
K_CAN4_L
0.35
SW
X1314*1V
X1314*2V
1
2
A258*6B
K_CAN4_L
0.35
SW
K_CAN4_H
0.35
GR
7
16
X382*1B
50
49
A258*8B
K_CAN2_H
0.35
GE/RT
K_CAN2_L
0.35
GE/BR
12
25
R2*1B
R2a
CAN terminator 2
26
R2*1B
31
0.5
BR
Z10*22B
with optional extras

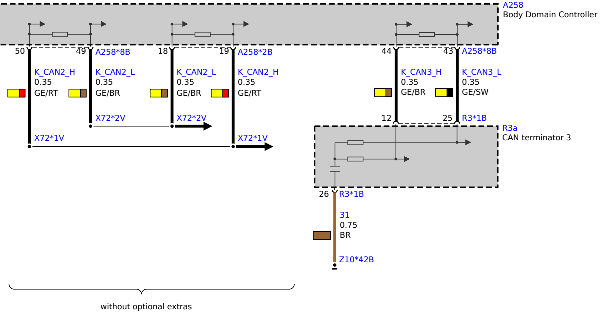
A258
Body Domain Controller
50
49
A258*8B
18
19
A258*2B
44
43
A258*8B
K_CAN2_H
0.35
GE/RT
K_CAN2_L
0.35
GE/BR
K_CAN2_L
0.35
GE/BR
K_CAN2_H
0.35
GE/RT
K_CAN3_H
0.35
GE/BR
K_CAN3_L
0.35
GE/SW
X72*2V
X72*2V
X72*1V
X72*1V
12
25
R3*1B
R3a
CAN terminator 3
26
R3*1B
31
0.75
BR
Z10*42B
without optional extras