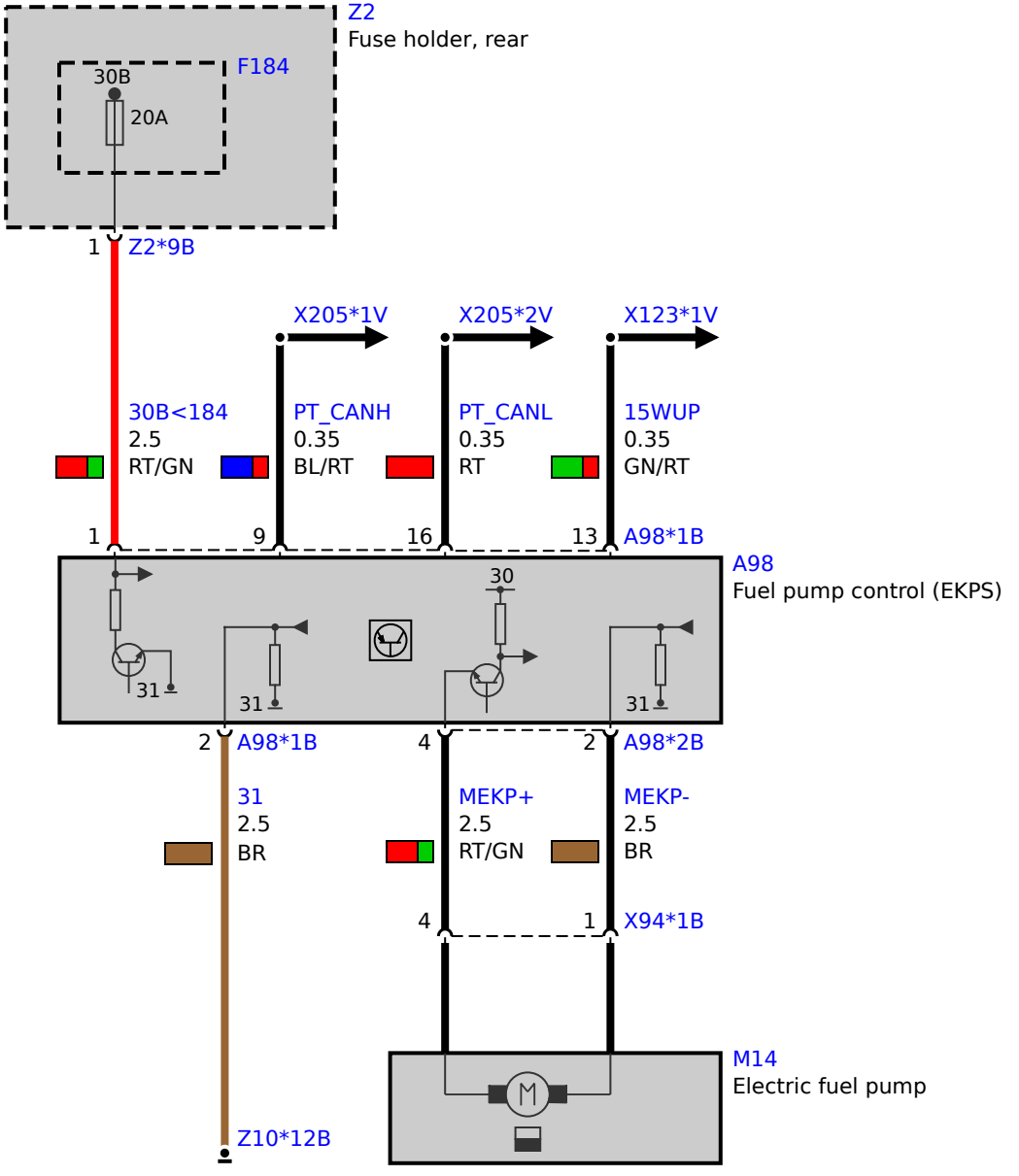
Z2
Fuse holder, rear
F184
30B
20A
1
Z2*9B
X205*1V
X205*2V
X123*1V
30B<184
2.5
RT/GN
PT_CANH
0.35
BL/RT
PT_CANL
0.35
RT
15WUP
0.35
GN/RT
1
9
16
13
A98*1B
A98
Fuel pump control (EKPS)
30
31
31
31
2
A98*1B
4
2
A98*2B
31
2.5
BR
MEKP+
2.5
RT/GN
MEKP-
2.5
BR
4
1
X94*1B
M14
Electric fuel pump
Z10*12B