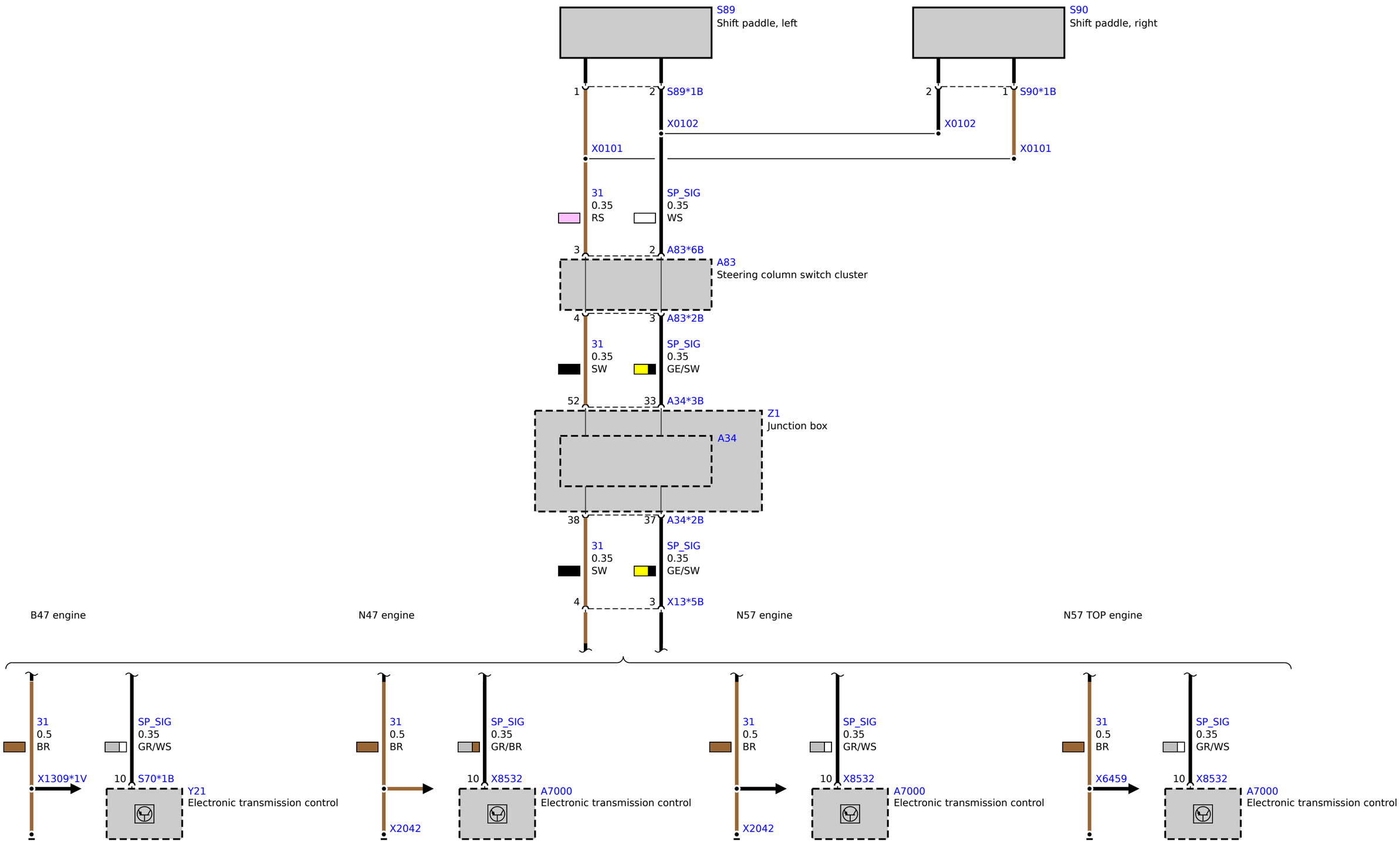
S89
Shift paddle, left
S90
Shift paddle, right
1
2
S89*1B
2
1
S90*1B
X0102
X0102
X0101
X0101
31
0.35
RS
SP_SIG
0.35
WS
3
2
A83*6B
A83
Steering column switch cluster
4
3
A83*2B
31
0.35
SW
SP_SIG
0.35
GE/SW
52
33
A34*3B
Z1
Junction box
A34
38
37
A34*2B
31
0.35
SW
SP_SIG
0.35
GE/SW
4
3
X13*5B
B47 engine
N47 engine
N57 engine
N57 TOP engine
31
0.5
BR
X1309*1V
SP_SIG
0.35
GR/WS
10
S70*1B
Y21
Electronic transmission control
31
0.5
BR
X2042
SP_SIG
0.35
GR/BR
10
X8532
A7000
Electronic transmission control
31
0.5
BR
X2042
SP_SIG
0.35
GR/WS
10
X8532
A7000
Electronic transmission control
31
0.5
BR
X6459
SP_SIG
0.35
GR/WS
10
X8532
A7000
Electronic transmission control