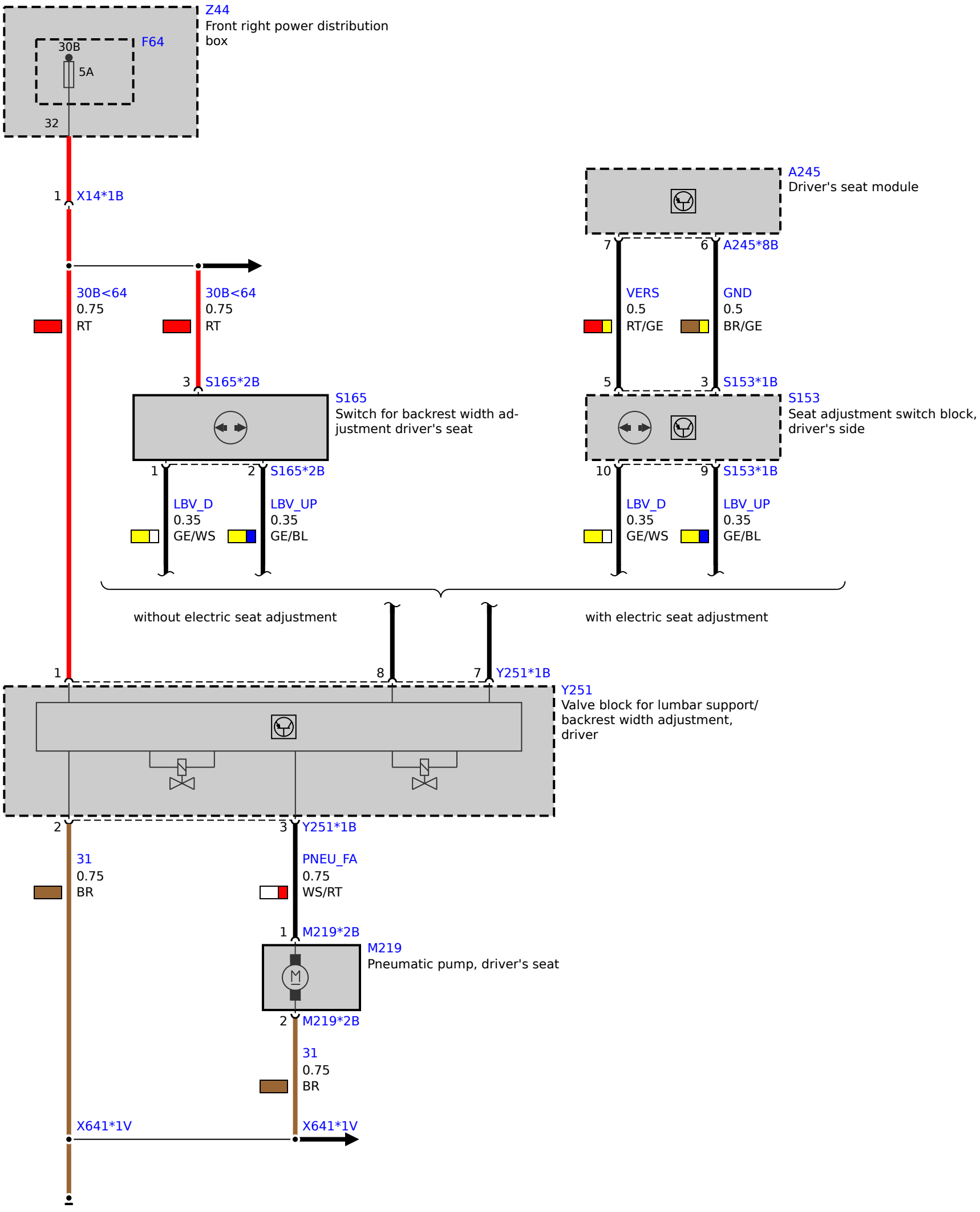
Z44
Front right power distribution box
F64
30B
5A
32
1
X14*1B
30B<64
0.75
RT
30B<64
0.75
RT
3
S165*2B
S165
Switch for backrest width adjustment driver's seat
1
2
S165*2B
LBV_D
0.35
GE/WS
LBV_UP
0.35
GE/BL
A245
Driver's seat module
7
6
A245*8B
VERS
0.5
RT/GE
GND
0.5
BR/GE
5
3
S153*1B
S153
Seat adjustment switch block, driver's side
10
9
S153*1B
LBV_D
0.35
GE/WS
LBV_UP
0.35
GE/BL
without electric seat adjustment
with electric seat adjustment
1
8
7
Y251*1B
Y251
Valve block for lumbar support/ backrest width adjustment, driver
2
3
Y251*1B
31
0.75
BR
PNEU_FA
0.75
WS/RT
1
M219*2B
M219
Pneumatic pump, driver's seat
2
M219*2B
31
0.75
BR
X641*1V
X641*1V