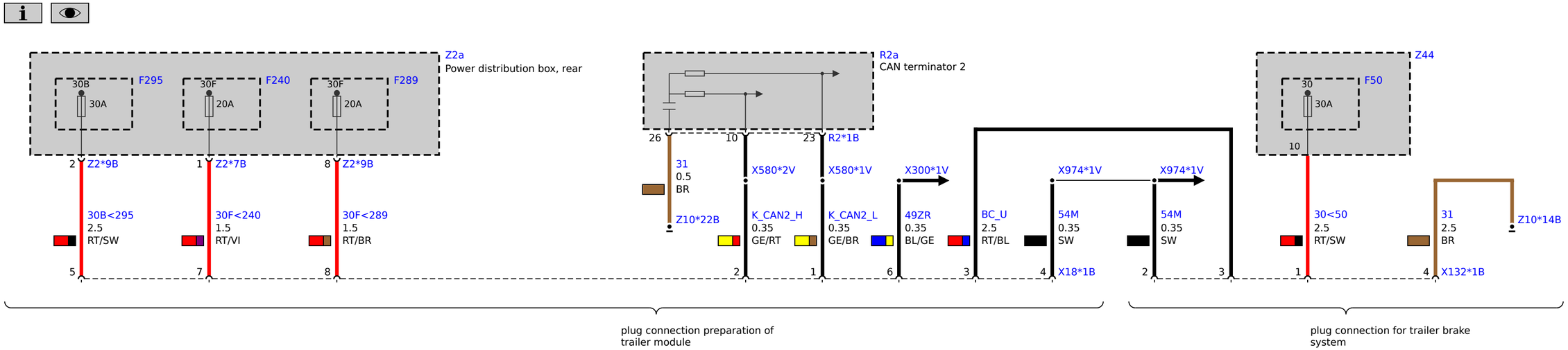
Z2a
Power distribution box, rear
30B
F295
30A
30F
F240
20A
30F
F289
20A
2
Z2*9B
1
Z2*7B
8
Z2*9B
30B<295
2.5
RT/SW
30F<240
1.5
RT/VI
30F<289
1.5
RT/BR
5
7
8
R2a
CAN terminator 2
26
10
23
R2*1B
31
0.5
BR
Z10*22B
X580*2V
X580*1V
X300*1V
X974*1V
X974*1V
K_CAN2_H
0.35
GE/RT
K_CAN2_L
0.35
GE/BR
49ZR
0.35
BL/GE
BC_U
2.5
RT/BL
54M
0.35
SW
54M
0.35
SW
2
1
6
3
4
X18*1B
2
3
Z44
30
F50
30A
10
30<50
2.5
RT/SW
1
31
2.5
BR
Z10*14B
4
X132*1B
plug connection preparation of
trailer module
plug connection for trailer brake
system