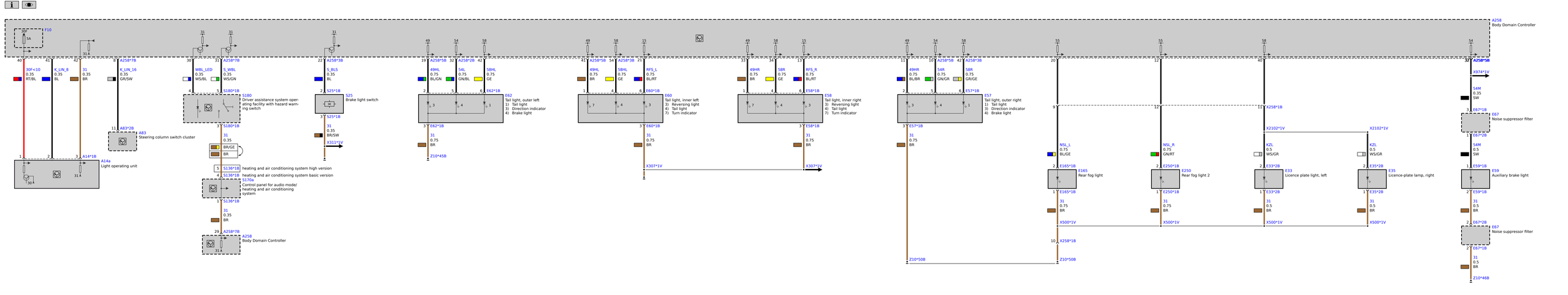
F10
30
5A
30F<10
0.35
RT/BL
K_LIN_8
0.35
BL
31
0.35
BR
A14*1B
A14a
Light operating unit
A258*7B
K_LIN_16
0.35
GR/SW
A83*2B
A83
Steering column switch cluster
WBL_LED
0.35
WS/BL
S_WBL
0.35
WS/GN
S180*1B
S180
Driver assistance system operating facility with hazard warning switch
S180*1B
BR/GE
BR
S136*1B
heating and air conditioning system high version
S136*1B
heating and air conditioning system basic version
S170a
Control panel for audio mode/ heating and air conditioning system
S136*1B
A258*7B
A258
Body Domain Controller
A258*3B
S_BLS
0.35
BL
S25
Brake light switch
S25*1B
BR/SW
X311*1V
A258*5B
49HL
0.75
BL/GN
A258*2B
54L
0.75
GN/BL
58HL
0.75
GE
E62
Tail light, outer left
1) Tail light
3) Direction indicator
4) Brake light
E62*1B
Z10*45B
A258*5B
49HL
0.75
BR
A258*3B
58HL
0.75
GE
RFS_L
0.75
BL/RT
E60
Tail light, inner left
3) Reversing light
4) Tail light
7) Turn indicator
E60*1B
X307*1V
49HR
0.75
BR
58R
0.75
GE
RFS_R
0.75
BL/RT
E58
Tail light, inner right
3) Reversing light
4) Tail light
7) Turn indicator
E58*1B
X307*1V
49HR
0.75
BL/BR
A258*5B
54R
0.75
GN/GR
A258*3B
58R
0.75
GR/GE
E57
Tail light, outer right
1) Tail light
3) Direction indicator
4) Brake light
E57*1B
Z10*50B
NSL_L
0.75
BL/GE
E165*1B
E165
Rear fog light
E165*1B
X500*1V
X258*1B
Z10*50B
NSL_R
0.75
GN/RT
E250*1B
E250
Rear fog light 2
E250*1B
X500*1V
X258*1B
X2102*1V
KZL
0.5
WS/GR
E33*2B
E33
Licence plate light, left
E33*2B
X500*1V
X2102*1V
KZL
0.5
WS/GR
E35*2B
E35
Licence-plate lamp, right
E35*2B
X500*1V
A258
Body Domain Controller
A258*5B
X974*1V
S4M
0.35
SW
E67*1B
E67
Noise suppressor filter
E67*2B
S4M
0.5
SW
E59*1B
E59
Auxiliary brake light
E59*1B
E67*2B
E67
Noise suppressor filter
E67*1B
31
0.5
BR
Z10*46B