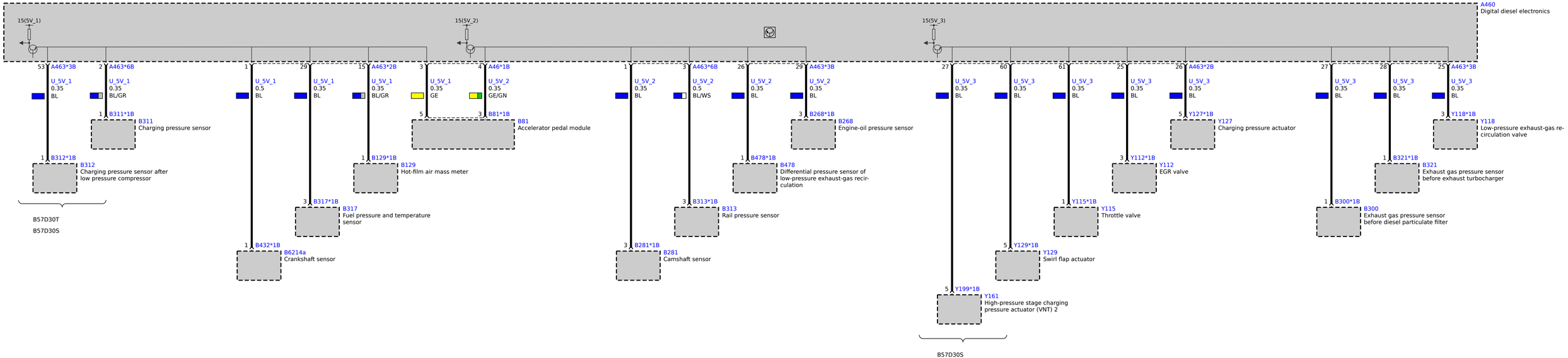
A460
Digital diesel electronics
15(5V_1)
15(5V_2)
15(5V_3)
53 A463*3B
U_5V_1
0.35
BL
2 A463*6B
U_5V_1
0.35
BL/GR
1 B311*1B
B311
Charging pressure sensor
1 B312*1B
B312
Charging pressure sensor after low pressure compressor
B57D30T
B57D30S
1
U_5V_1
0.5
BL
1 B432*1B
B6214a
Crankshaft sensor
29
U_5V_1
0.35
BL
3 B317*1B
B317
Fuel pressure and temperature sensor
15 A463*2B
U_5V_1
0.35
BL/GR
1 B129*1B
B129
Hot-film air mass meter
3
U_5V_1
0.35
GE
4 A46*1B
U_5V_2
0.35
GE/GN
5 3 B81*1B
B81
Accelerator pedal module
1
U_5V_2
0.35
BL
3 B281*1B
B281
Camshaft sensor
3 A463*6B
U_5V_2
0.5
BL/WS
3 B313*1B
B313
Rail pressure sensor
26
U_5V_2
0.35
BL
1 B478*1B
B478
Differential pressure sensor of low-pressure exhaust-gas recirculation
29 A463*3B
U_5V_2
0.35
BL
3 B268*1B
B268
Engine-oil pressure sensor
27
U_5V_3
0.35
BL
5 Y199*1B
Y161
High-pressure stage charging pressure actuator (VNT) 2
B57D30S
60
U_5V_3
0.35
BL
5 Y129*1B
Y129
Swirl flap actuator
61
U_5V_3
0.35
BL
1 Y115*1B
Y115
Throttle valve
25
U_5V_3
0.35
BL
3 Y112*1B
Y112
EGR valve
26 A463*2B
U_5V_3
0.35
BL
5 Y127*1B
Y127
Charging pressure actuator
27
U_5V_3
0.35
BL
1 B300*1B
B300
Exhaust gas pressure sensor before diesel particulate filter
28
U_5V_3
0.35
BL
1 B321*1B
B321
Exhaust gas pressure sensor before exhaust turbocharger
25 A463*3B
U_5V_3
0.35
BL
3 Y118*1B
Y118
Low-pressure exhaust-gas recirculation valve