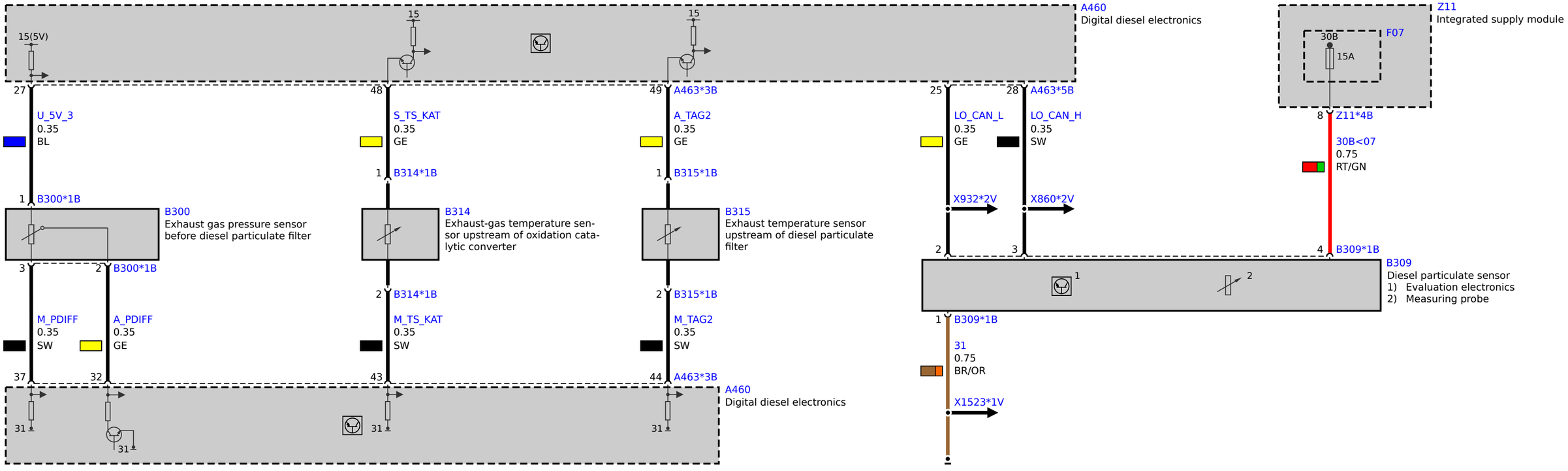
A460
Digital diesel electronics
15(5V)
15
15
27
48
49
A463*3B
25
28
A463*5B
U_5V_3
0.35
BL
S_TS_KAT
0.35
GE
A_TAG2
0.35
GE
LO_CAN_L
0.35
GE
LO_CAN_H
0.35
SW
1
B300*1B
1
B314*1B
1
B315*1B
X932*2V
X860*2V
B300
Exhaust gas pressure sensor before diesel particulate filter
B314
Exhaust-gas temperature sensor upstream of oxidation catalytic converter
B315
Exhaust temperature sensor upstream of diesel particulate filter
3
2
B300*1B
2
B314*1B
2
B315*1B
M_PDIFF
0.35
SW
A_PDIFF
0.35
GE
M_TS_KAT
0.35
SW
M_TAG2
0.35
SW
37
32
43
44
A463*3B
A460
Digital diesel electronics
31
31
31
31
Z11
Integrated supply module
30B
F07
15A
8
Z11*4B
30B<07
0.75
RT/GN
2
3
4
B309*1B
B309
Diesel particulate sensor
1) Evaluation electronics
2) Measuring probe
1
2
1
B309*1B
31
0.75
BR/OR
X1523*1V