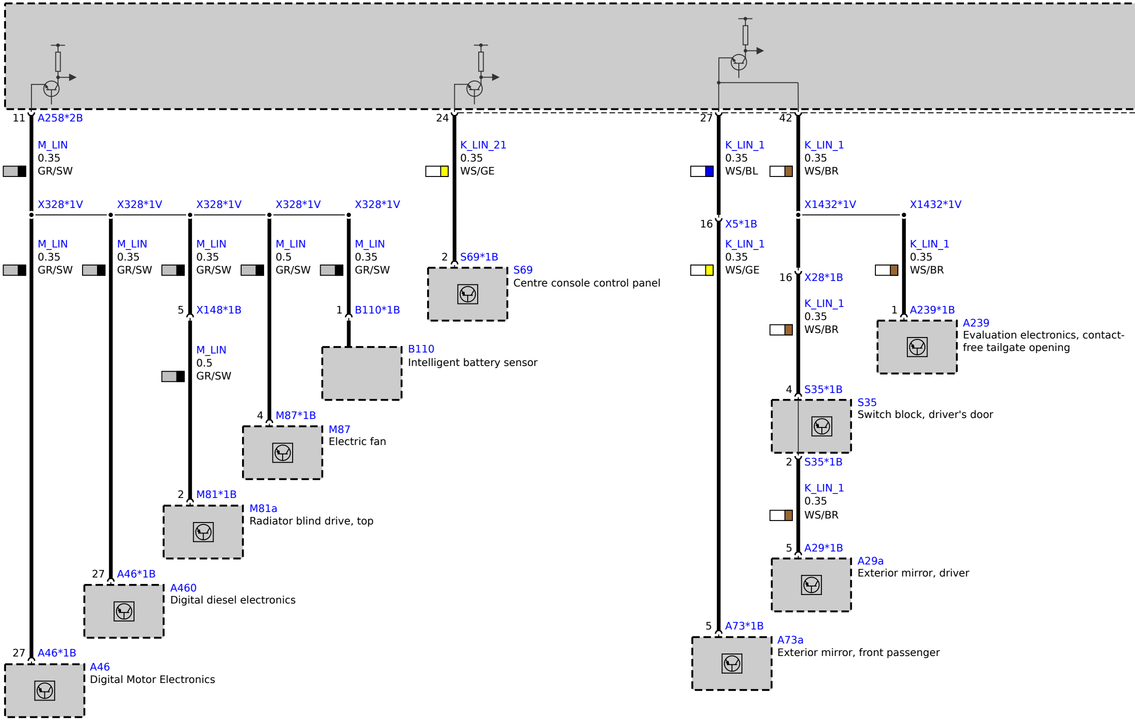
11 A258*2B
M_LIN
0.35
GR/SW
X328*1V
X328*1V
X328*1V
X328*1V
X328*1V
M_LIN
0.35
GR/SW
M_LIN
0.35
GR/SW
M_LIN
0.35
GR/SW
M_LIN
0.5
GR/SW
M_LIN
0.35
GR/SW
5 X148*1B
M_LIN
0.5
GR/SW
1 B110*1B
B110
Intelligent battery sensor
4 M87*1B
M87
Electric fan
2 M81*1B
M81a
Radiator blind drive, top
27 A46*1B
A460
Digital diesel electronics
27 A46*1B
A46
Digital Motor Electronics
24
K_LIN_21
0.35
WS/GE
2 S69*1B
S69
Centre console control panel
27
K_LIN_1
0.35
WS/BL
16 X5*1B
K_LIN_1
0.35
WS/GE
5 A73*1B
A73a
Exterior mirror, front passenger
42
K_LIN_1
0.35
WS/BR
X1432*1V
X1432*1V
K_LIN_1
0.35
WS/BR
1 A239*1B
A239
Evaluation electronics, contact-free tailgate opening
16 X28*1B
K_LIN_1
0.35
WS/BR
4 S35*1B
S35
Switch block, driver's door
2 S35*1B
K_LIN_1
0.35
WS/BR
5 A29*1B
A29a
Exterior mirror, driver

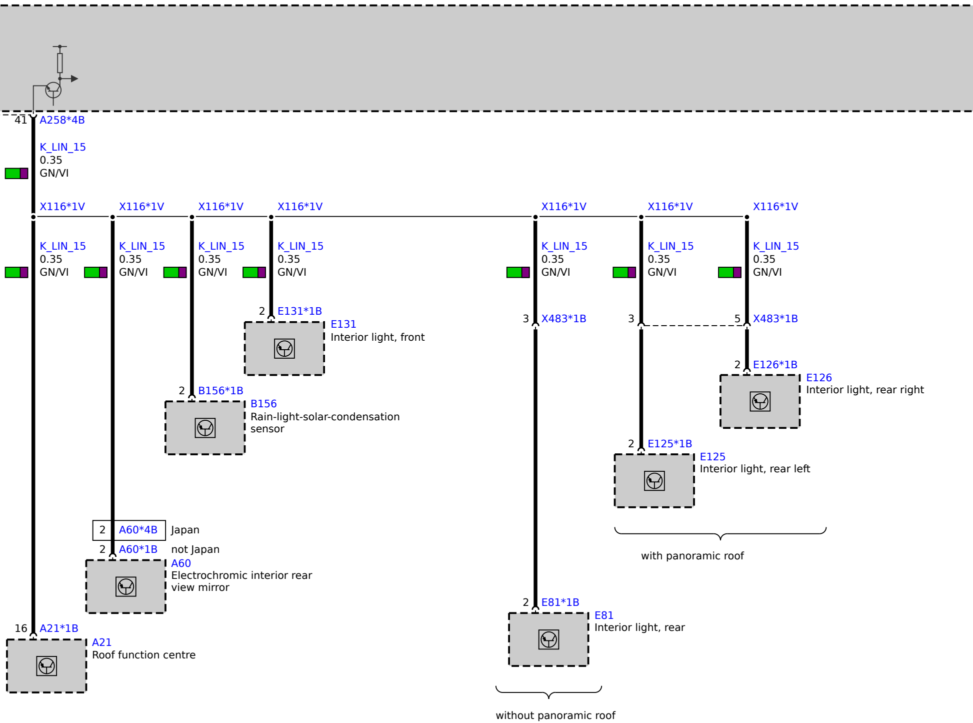
41
A258*4B
K_LIN_15
0.35
GN/VI
X116*1V
X116*1V
X116*1V
X116*1V
X116*1V
X116*1V
X116*1V
K_LIN_15
0.35
GN/VI
K_LIN_15
0.35
GN/VI
K_LIN_15
0.35
GN/VI
K_LIN_15
0.35
GN/VI
K_LIN_15
0.35
GN/VI
K_LIN_15
0.35
GN/VI
K_LIN_15
0.35
GN/VI
2
E131*1B
E131
Interior light, front
3
X483*1B
3
5
X483*1B
2
E126*1B
E126
Interior light, rear right
2
B156*1B
B156
Rain-light-solar-condensation sensor
2
E125*1B
E125
Interior light, rear left
with panoramic roof
2
A60*4B
Japan
2
A60*1B
not Japan
A60
Electrochromic interior rear view mirror
2
E81*1B
E81
Interior light, rear
16
A21*1B
A21
Roof function centre
without panoramic roof

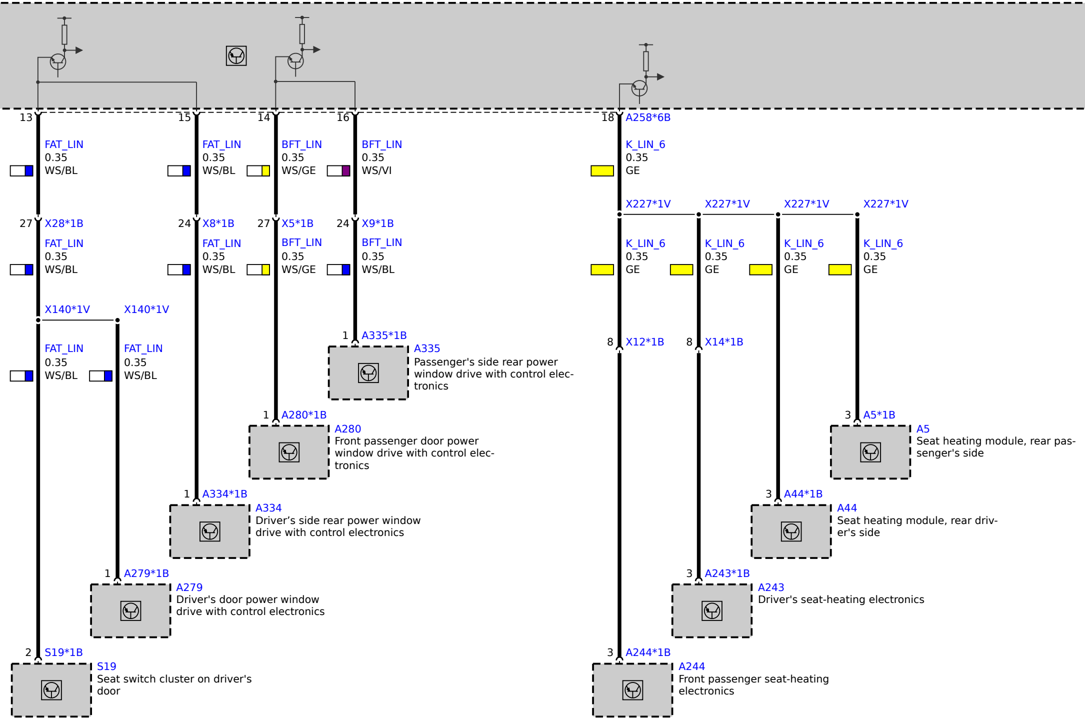
13
15
14
16
18
A258*6B
FAT_LIN
0.35
WS/BL
FAT_LIN
0.35
WS/BL
BFT_LIN
0.35
WS/GE
BFT_LIN
0.35
WS/VI
K_LIN_6
0.35
GE
X227*1V
X227*1V
X227*1V
X227*1V
27
X28*1B
24
X8*1B
27
X5*1B
24
X9*1B
FAT_LIN
0.35
WS/BL
FAT_LIN
0.35
WS/BL
BFT_LIN
0.35
WS/GE
BFT_LIN
0.35
WS/BL
K_LIN_6
0.35
GE
K_LIN_6
0.35
GE
K_LIN_6
0.35
GE
K_LIN_6
0.35
GE
X140*1V
X140*1V
1
A335*1B
A335
Passenger's side rear power window drive with control electronics
8
X12*1B
8
X14*1B
FAT_LIN
0.35
WS/BL
FAT_LIN
0.35
WS/BL
1
A280*1B
A280
Front passenger door power window drive with control electronics
3
A5*1B
A5
Seat heating module, rear passenger's side
1
A334*1B
A334
Driver’s side rear power window drive with control electronics
3
A44*1B
A44
Seat heating module, rear driver's side
1
A279*1B
A279
Driver's door power window drive with control electronics
3
A243*1B
A243
Driver's seat-heating electronics
2
S19*1B
S19
Seat switch cluster on driver's door
3
A244*1B
A244
Front passenger seat-heating electronics

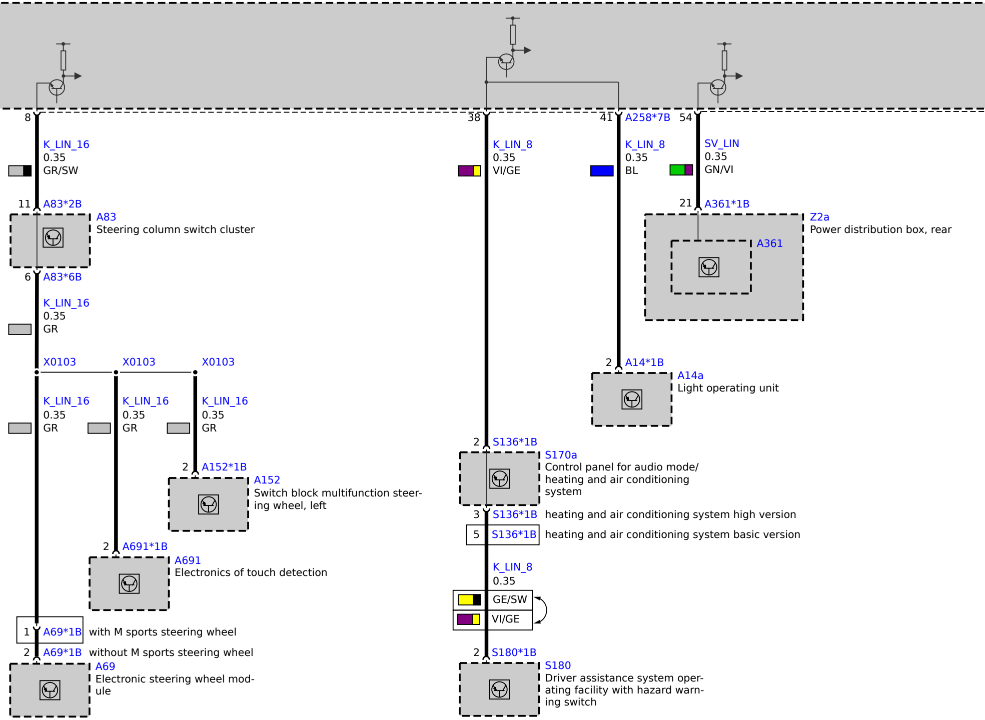
8
K_LIN_16
0.35
GR/SW
11 A83*2B
A83
Steering column switch cluster
6 A83*6B
K_LIN_16
0.35
GR
X0103
X0103
X0103
K_LIN_16
0.35
GR
K_LIN_16
0.35
GR
K_LIN_16
0.35
GR
2 A152*1B
A152
Switch block multifunction steering wheel, left
2 A691*1B
A691
Electronics of touch detection
1 A69*1B with M sports steering wheel
2 A69*1B without M sports steering wheel
A69
Electronic steering wheel module
38
K_LIN_8
0.35
VI/GE
2 S136*1B
S170a
Control panel for audio mode/ heating and air conditioning system
3 S136*1B heating and air conditioning system high version
5 S136*1B heating and air conditioning system basic version
K_LIN_8
0.35
GE/SW
VI/GE
2 S180*1B
S180
Driver assistance system operating facility with hazard warning switch
41 A258*7B
K_LIN_8
0.35
BL
2 A14*1B
A14a
Light operating unit
54
SV_LIN
0.35
GN/VI
21 A361*1B
Z2a
Power distribution box, rear
A361

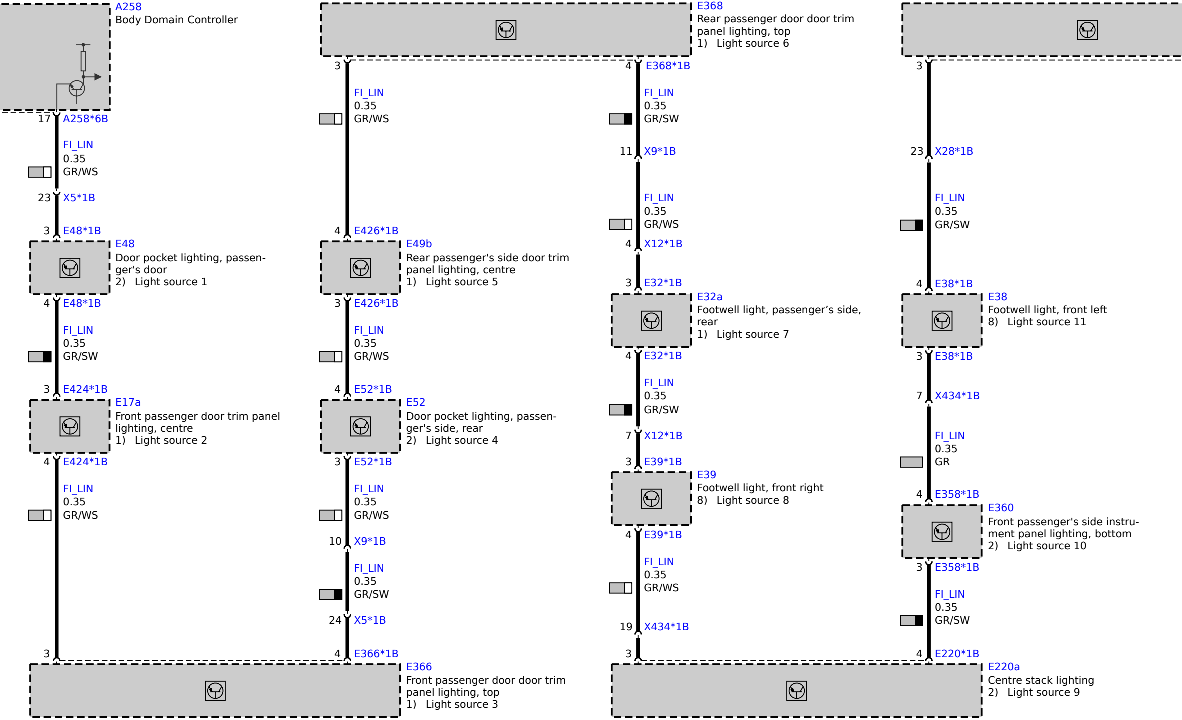
A258
Body Domain Controller
17
A258*6B
FI_LIN
0.35
GR/WS
23
X5*1B
3
E48*1B
E48
Door pocket lighting, passenger's door
2) Light source 1
4
E48*1B
FI_LIN
0.35
GR/SW
3
E424*1B
E17a
Front passenger door trim panel lighting, centre
1) Light source 2
4
E424*1B
FI_LIN
0.35
GR/WS
3
E368
Rear passenger door door trim panel lighting, top
1) Light source 6
3
FI_LIN
0.35
GR/WS
4
E426*1B
E49b
Rear passenger's side door trim panel lighting, centre
1) Light source 5
3
E426*1B
FI_LIN
0.35
GR/WS
4
E52*1B
E52
Door pocket lighting, passenger's side, rear
2) Light source 4
3
E52*1B
FI_LIN
0.35
GR/WS
10
X9*1B
FI_LIN
0.35
GR/SW
24
X5*1B
4
E366*1B
E366
Front passenger door door trim panel lighting, top
1) Light source 3
4
E368*1B
FI_LIN
0.35
GR/SW
11
X9*1B
FI_LIN
0.35
GR/WS
4
X12*1B
3
E32*1B
E32a
Footwell light, passenger’s side, rear
1) Light source 7
4
E32*1B
FI_LIN
0.35
GR/SW
7
X12*1B
3
E39*1B
E39
Footwell light, front right
8) Light source 8
4
E39*1B
FI_LIN
0.35
GR/WS
19
X434*1B
3
3
23
X28*1B
FI_LIN
0.35
GR/SW
4
E38*1B
E38
Footwell light, front left
8) Light source 11
3
E38*1B
7
X434*1B
FI_LIN
0.35
GR
4
E358*1B
E360
Front passenger's side instrument panel lighting, bottom
2) Light source 10
3
E358*1B
FI_LIN
0.35
GR/SW
4
E220*1B
E220a
Centre stack lighting
2) Light source 9

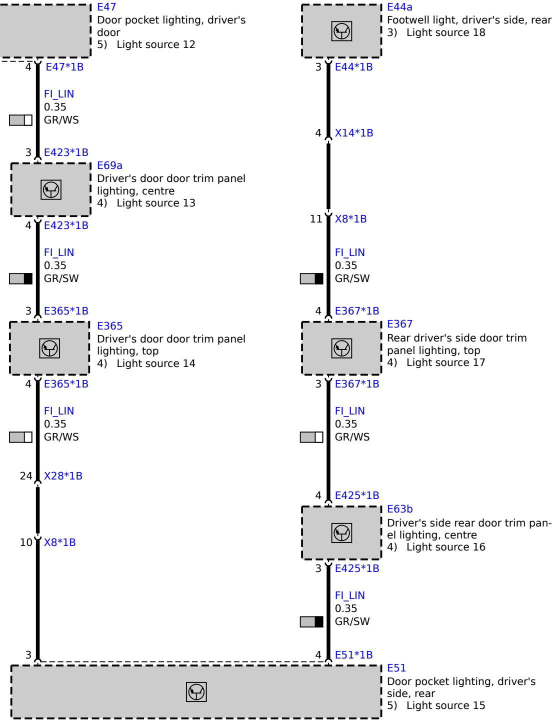
E47
Door pocket lighting, driver's door
5) Light source 12
4
E47*1B
FI_LIN
0.35
GR/WS
3
E423*1B
E69a
Driver's door door trim panel lighting, centre
4) Light source 13
4
E423*1B
FI_LIN
0.35
GR/SW
3
E365*1B
E365
Driver's door door trim panel lighting, top
4) Light source 14
4
E365*1B
FI_LIN
0.35
GR/WS
24
X28*1B
10
X8*1B
3
E44a
Footwell light, driver's side, rear
3) Light source 18
3
E44*1B
4
X14*1B
11
X8*1B
FI_LIN
0.35
GR/SW
4
E367*1B
E367
Rear driver's side door trim panel lighting, top
4) Light source 17
3
E367*1B
FI_LIN
0.35
GR/WS
4
E425*1B
E63b
Driver's side rear door trim panel lighting, centre
4) Light source 16
3
E425*1B
FI_LIN
0.35
GR/SW
4
E51*1B
E51
Door pocket lighting, driver's side, rear
5) Light source 15