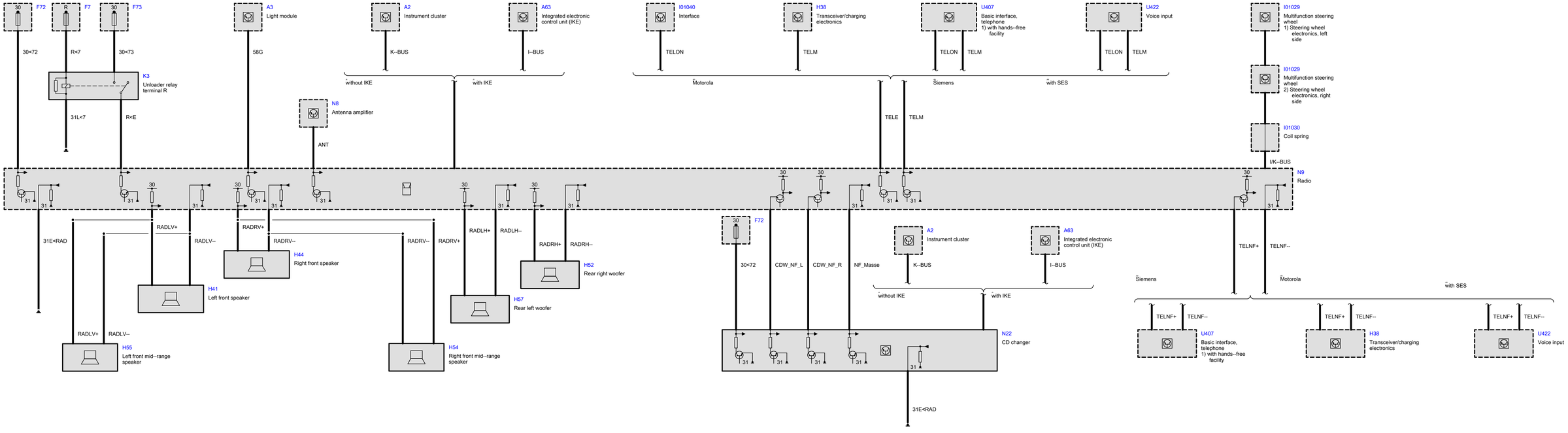
30
F72
R
F7
30
F73
30<72
R<7
30<73
K3
Unloader relay terminal R
31L<7
R<E
A3
Light module
58G
N8
Antenna amplifier
ANT
A2
Instrument cluster
K--BUS
A63
Integrated electronic control unit (IKE)
I--BUS
without IKE
with IKE
I01040
Interface
TELON
H38
Transceiver/charging electronics
TELM
Motorola
U407
Basic interface, telephone
1) with hands--free facility
TELON
TELM
Siemens
U422
Voice input
TELON
TELM
with SES
TELE
TELM
I01029
Multifunction steering wheel
1) Steering wheel electronics, left side
I01029
Multifunction steering wheel
2) Steering wheel electronics, right side
I01030
Coil spring
I/K--BUS
N9
Radio
31
30
31E<RAD
RADLV+
RADLV--
H41
Left front speaker
RADRV+
RADRV--
H44
Right front speaker
RADLV+
RADLV--
H55
Left front mid--range speaker
RADRV--
RADRV+
H54
Right front mid--range speaker
RADLH+
RADLH--
H57
Rear left woofer
RADRH+
RADRH--
H52
Rear right woofer
F72
30<72
CDW_NF_L
CDW_NF_R
NF_Masse
A2
Instrument cluster
K--BUS
A63
Integrated electronic control unit (IKE)
I--BUS
without IKE
with IKE
N22
CD changer
31E<RAD
TELNF+
TELNF--
Siemens
Motorola
with SES
U407
Basic interface, telephone
1) with hands--free facility
H38
Transceiver/charging electronics
U422
Voice input