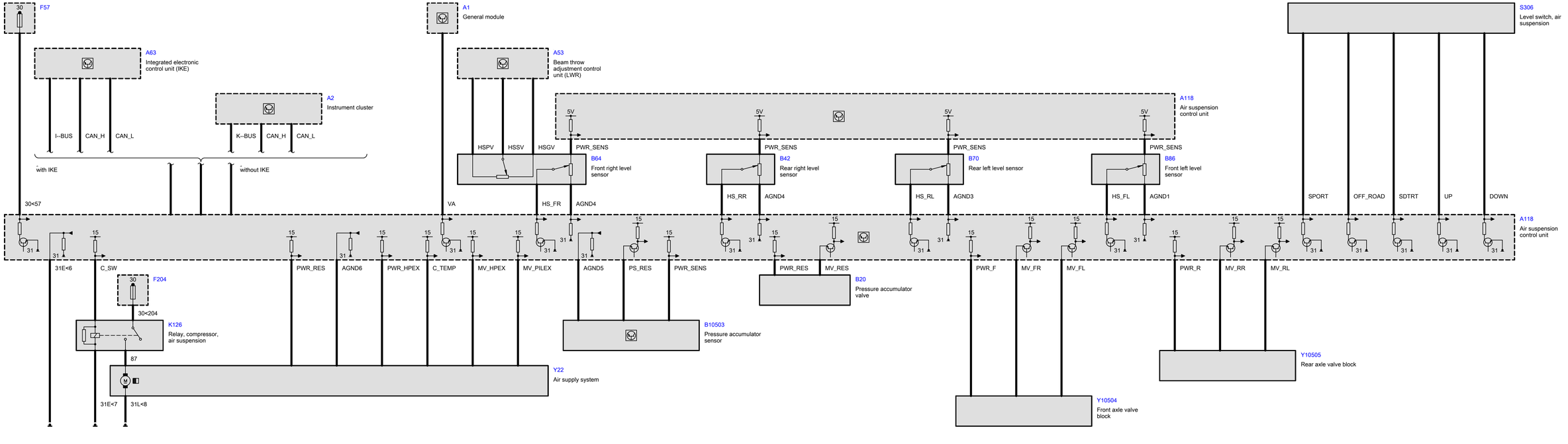
F57
30
A63
Integrated electronic control unit (IKE)
A2
Instrument cluster
I--BUS
CAN_H
CAN_L
K--BUS
CAN_H
CAN_L
with IKE
without IKE
A1
General module
A53
Beam throw adjustment control unit (LWR)
HSPV
HSSV
HSGV
VA
HS_FR
AGND4
B64
Front right level sensor
A118
Air suspension control unit
5V
PWR_SENS
B42
Rear right level sensor
HS_RR
AGND4
B70
Rear left level sensor
HS_RL
AGND3
B86
Front left level sensor
HS_FL
AGND1
S306
Level switch, air suspension
SPORT
OFF_ROAD
SDTRT
UP
DOWN
30<57
31
15
31E<6
C_SW
F204
30<204
K126
Relay, compressor, air suspension
87
M
Y22
Air supply system
31E<7
31L<8
PWR_RES
AGND6
PWR_HPEX
C_TEMP
MV_HPEX
MV_PILEX
AGND5
PS_RES
PWR_SENS
B10503
Pressure accumulator sensor
PWR_RES
MV_RES
B20
Pressure accumulator valve
PWR_F
MV_FR
MV_FL
Y10504
Front axle valve block
PWR_R
MV_RR
MV_RL
Y10505
Rear axle valve block