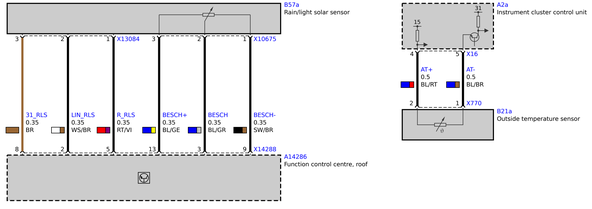
B57a
Rainlight solar sensor
X13084
X10675
31_RLS
0.35
BR
LIN_RLS
0.35
WS/BR
R_RLS
0.35
RT/VI
BESCH+
0.35
BL/GE
BESCH
0.35
BL/GR
BESCH-
0.35
SW/BR
X14288
A14286
Function control centre, roof
A2a
Instrument cluster control unit
X16
AT+
0.5
BL/RT
AT-
0.5
BL/BR
X770
B21a
Outside temperature sensor

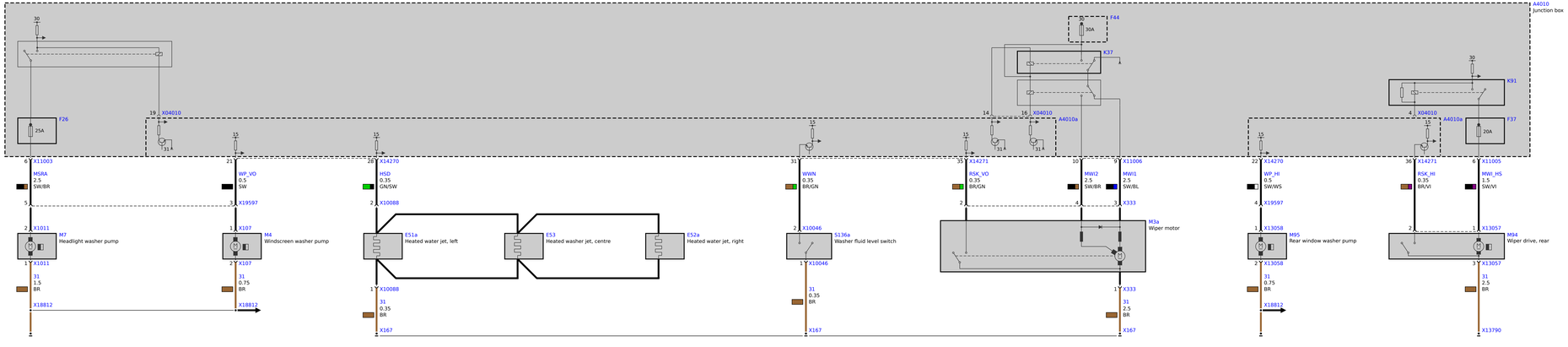
A4010
Junction box
F26
25A
X04010
X11003
MSRA
2.5
SW/BR
X1011
M7
Headlight washer pump
X18812
WP_VO
0.5
SW
X19597
X107
M4
Windscreen washer pump
X18B12
X14270
HSD
0.35
GN/SW
X10088
E51a
Heated water jet, left
E53
Heated washer jet, centre
E52a
Heated water jet, right
X167
F44
30A
K37
A4010a
WWN
0.35
BR/GN
X10046
S136a
Washer fluid level switch
X14271
RSK_VO
0.35
BR/GN
MWI2
2.5
SW/BR
X11006
MWI1
2.5
SW/BL
X333
M3a
Wiper motor
K91
F37
20A
WP_HI
0.5
SW/WS
X13058
M95
Rear window washer pump
RSK_HI
0.35
BR/VI
X11005
MWI_HS
1.5
SW/VI
X13057
M94
Wiper drive, rear
X13790