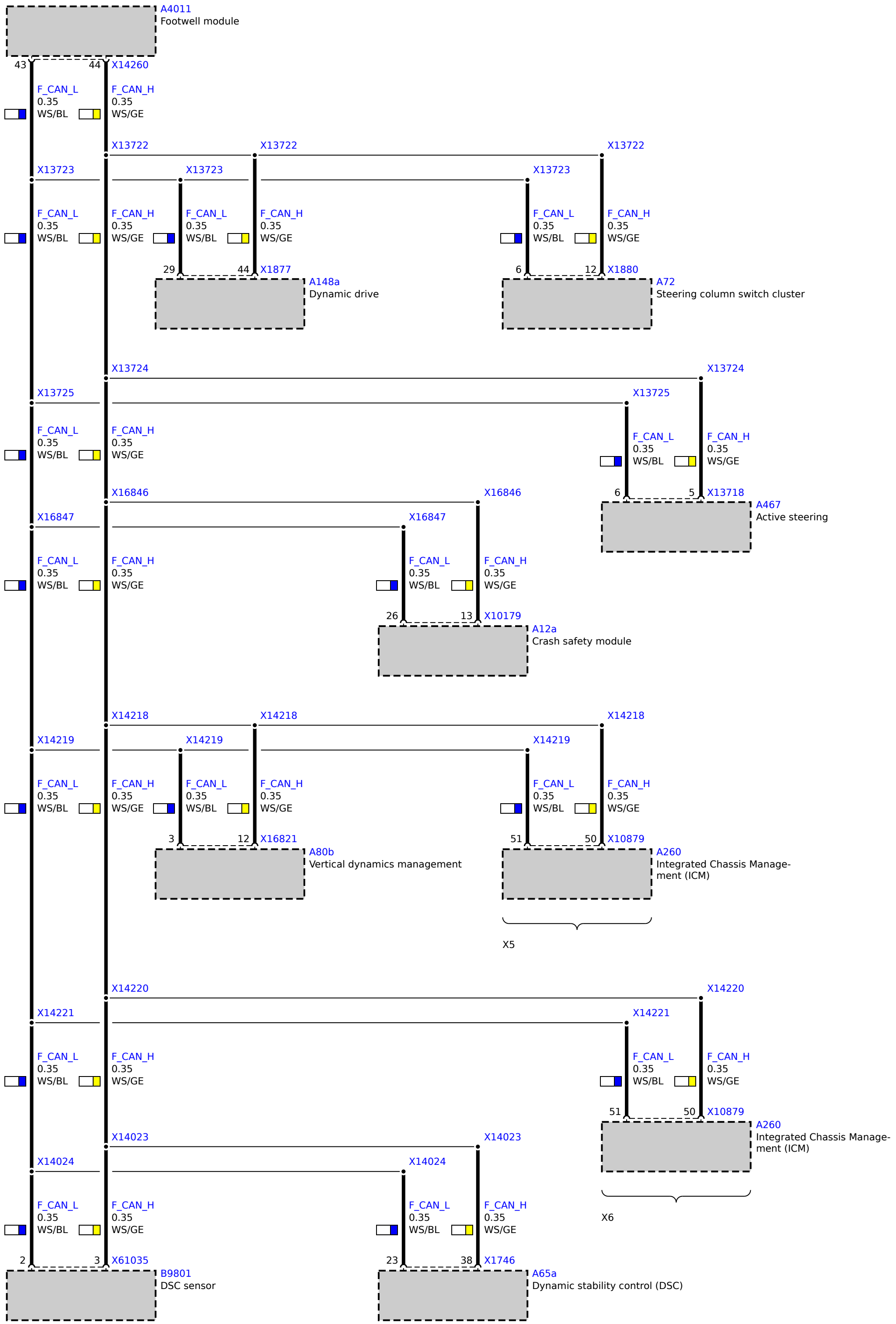
A4011
Footwell module
43
44
X14260
F_CAN_L
0.35
WS/BL
F_CAN_H
0.35
WS/GE
X13722
X13723
29
44
X1877
A148a
Dynamic drive
6
12
X1880
A72
Steering column switch cluster
X13724
X13725
X13718
A467
Active steering
X16846
X16847
26
13
X10179
A12a
Crash safety module
X14218
X14219
3
12
X16821
A80b
Vertical dynamics management
51
50
X10879
A260
Integrated Chassis Management (ICM)
X5
X14220
X14221
X14023
X14024
X6
2
3
X61035
B9801
DSC sensor
23
38
X1746
A65a
Dynamic stability control (DSC)