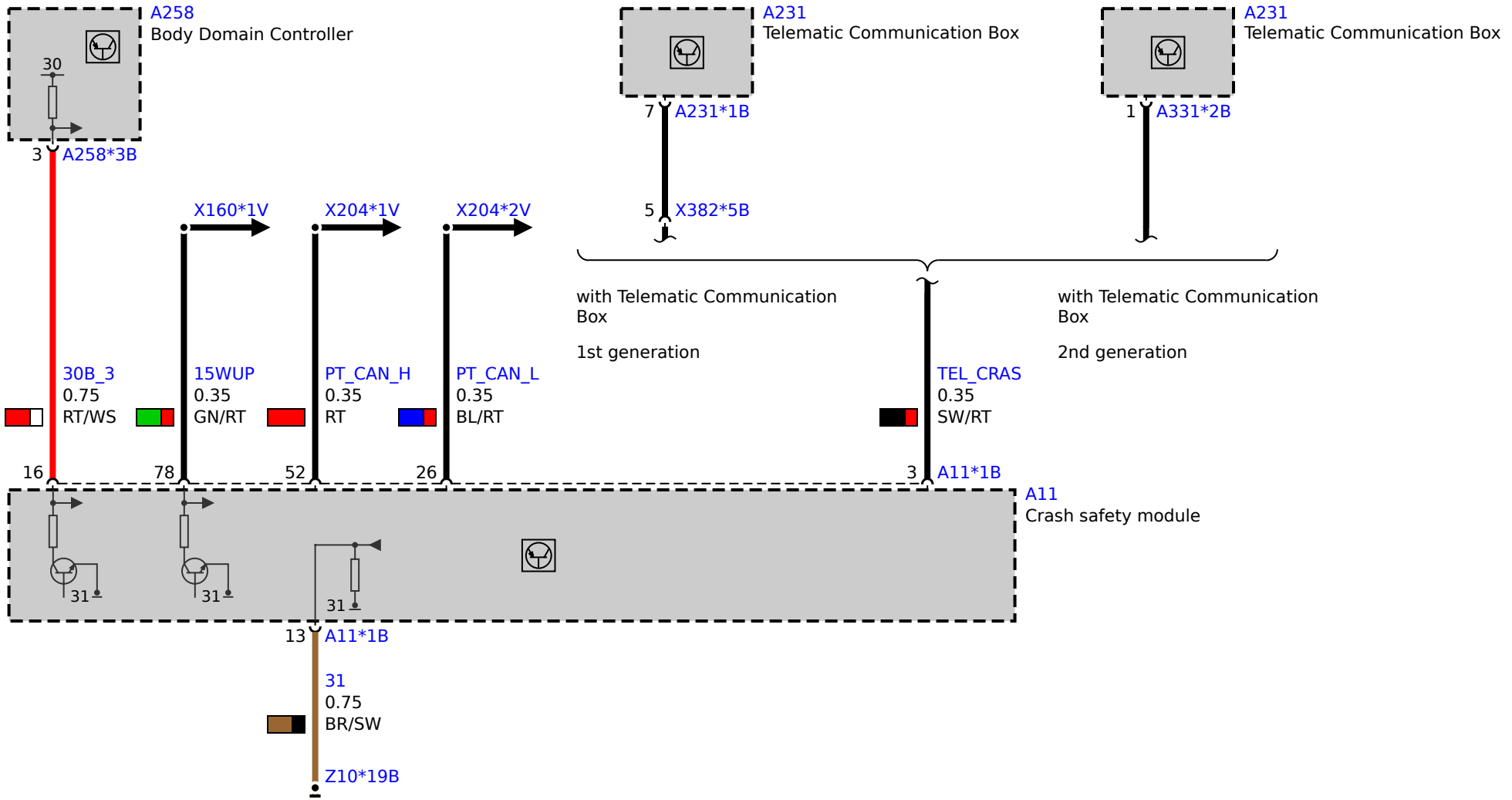
A258
Body Domain Controller
30
3
A258*3B
A231
Telematic Communication Box
7
A231*1B
5
X382*5B
A231
Telematic Communication Box
1
A331*2B
X160*1V
X204*1V
X204*2V
with Telematic Communication Box
1st generation
with Telematic Communication Box
2nd generation
30B_3
0.75
RT/WS
15WUP
0.35
GN/RT
PT_CAN_H
0.35
RT
PT_CAN_L
0.35
BL/RT
TEL_CRAS
0.35
SW/RT
16
78
52
26
3
A11*1B
A11
Crash safety module
31
31
31
13
A11*1B
31
0.75
BR/SW
Z10*19B