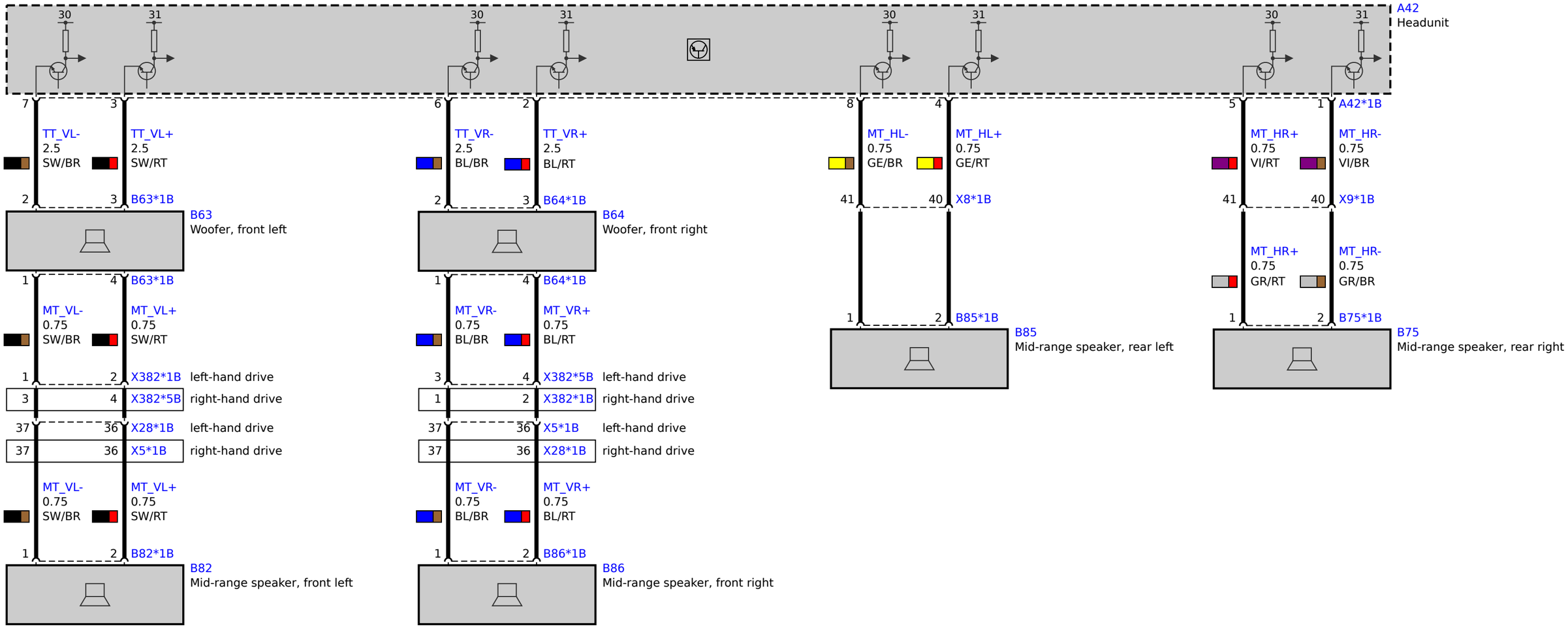
A42
Headunit
30
31
7
3
TT_VL-
2.5
SW/BR
TT_VL+
2.5
SW/RT
2
3
B63*1B
B63
Woofer, front left
1
4
B63*1B
MT_VL-
0.75
SW/BR
MT_VL+
0.75
SW/RT
1
2
X382*1B
left-hand drive
3
4
X382*5B
right-hand drive
37
36
X28*1B
left-hand drive
37
36
X5*1B
right-hand drive
MT_VL-
0.75
SW/BR
MT_VL+
0.75
SW/RT
1
2
B82*1B
B82
Mid-range speaker, front left
6
2
TT_VR-
2.5
BL/BR
TT_VR+
2.5
BL/RT
2
3
B64*1B
B64
Woofer, front right
1
4
B64*1B
MT_VR-
0.75
BL/BR
MT_VR+
0.75
BL/RT
3
4
X382*5B
left-hand drive
1
2
X382*1B
right-hand drive
37
36
X5*1B
left-hand drive
37
36
X28*1B
right-hand drive
MT_VR-
0.75
BL/BR
MT_VR+
0.75
BL/RT
1
2
B86*1B
B86
Mid-range speaker, front right
8
4
MT_HL-
0.75
GE/BR
MT_HL+
0.75
GE/RT
41
40
X8*1B
1
2
B85*1B
B85
Mid-range speaker, rear left
5
1
A42*1B
MT_HR+
0.75
VI/RT
MT_HR-
0.75
VI/BR
41
40
X9*1B
MT_HR+
0.75
GR/RT
MT_HR-
0.75
GR/BR
1
2
B75*1B
B75
Mid-range speaker, rear right