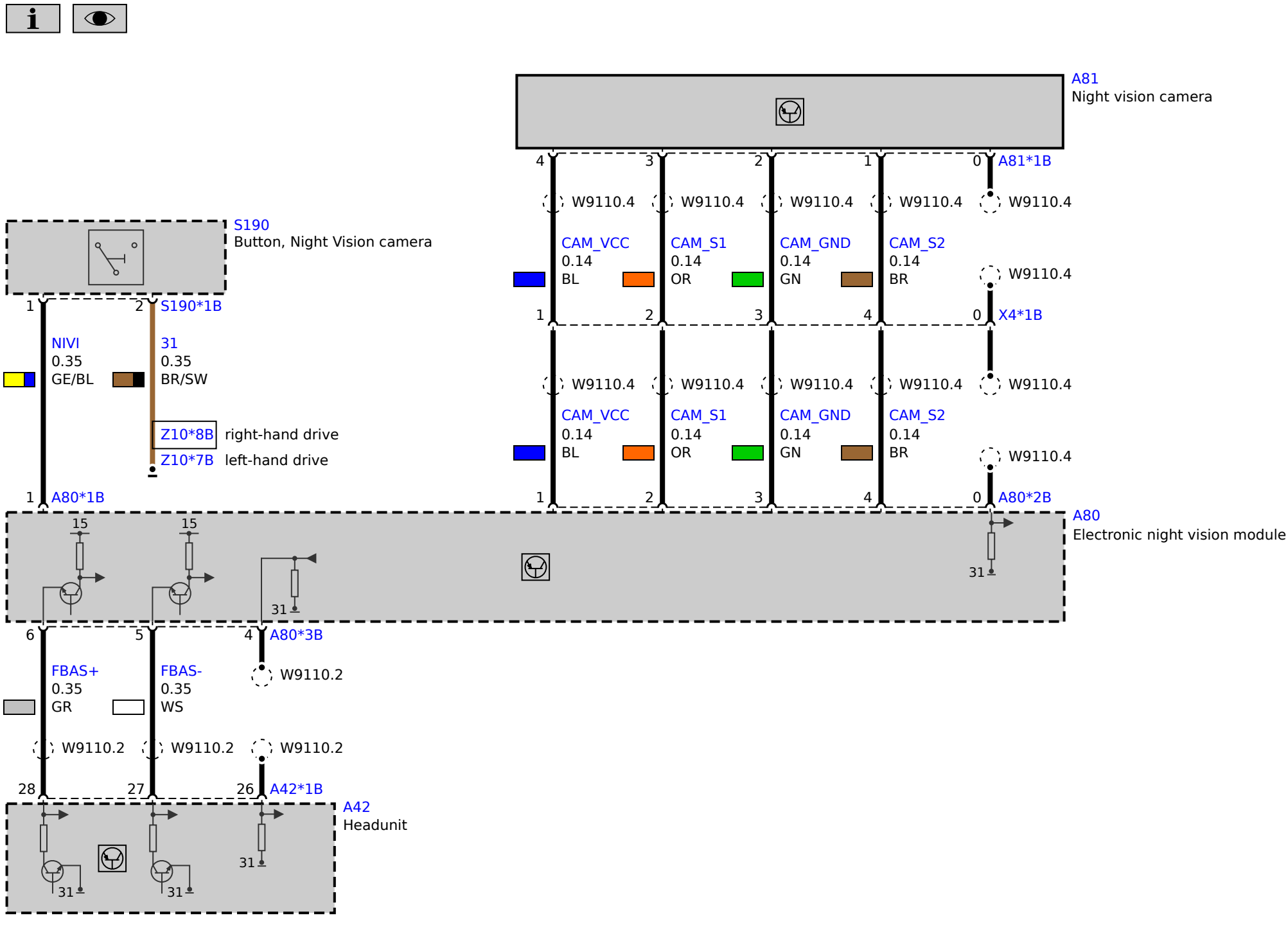
A81
Night vision camera
A81*1B
W9110.4
CAM_VCC
0.14
BL
CAM_S1
0.14
OR
CAM_GND
0.14
GN
CAM_S2
0.14
BR
X4*1B
A80*2B
S190
Button, Night Vision camera
S190*1B
NIVI
0.35
GE/BL
31
0.35
BR/SW
Z10*8B right-hand drive
Z10*7B left-hand drive
A80*1B
A80
Electronic night vision module
A80*3B
FBAS+
0.35
GR
FBAS-
0.35
WS
W9110.2
A42*1B
A42
Headunit