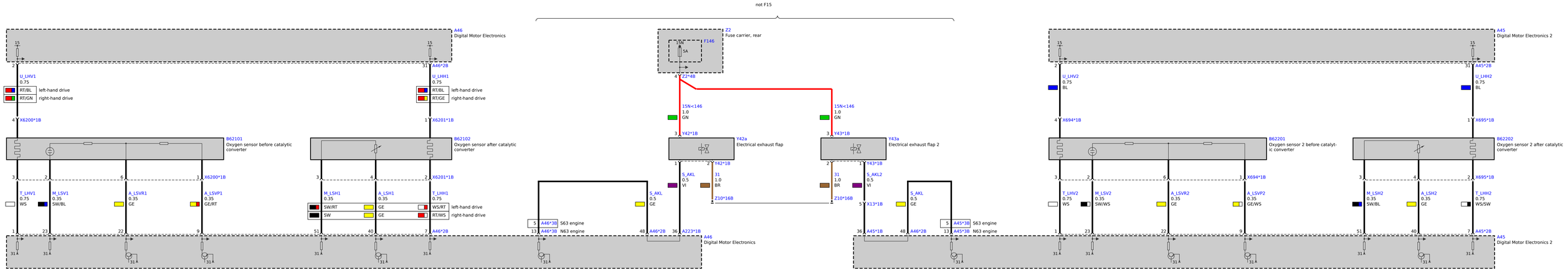
not F15
A46
Digital Motor Electronics
15
2
U_LHV1
0.75
RT/BL
left-hand drive
RT/GN
right-hand drive
4
X6200*1B
B62101
Oxygen sensor before catalytic converter
3
2
6
1
X6200*1B
T_LHV1
0.75
WS
M_LSV1
0.35
SW/BL
A_LSVR1
0.35
GE
A_LSVP1
0.35
GE/RT
1
23
22
9
31 A
31 A
31 A
31 A
31
A46*2B
U_LHH1
0.75
RT/BL
left-hand drive
RT/GE
right-hand drive
1
X6201*1B
B62102
Oxygen sensor after catalytic converter
3
4
2
X6201*1B
M_LSH1
0.35
A_LSH1
0.35
T_LHH1
0.75
SW/RT
GE
WS/RT
left-hand drive
SW
GE
RT/WS
right-hand drive
51
40
7
A46*2B
31 A
31 A
31 A
31
Z2
Fuse carrier, rear
15N
5A
F146
4
Z2*4B
15N<146
1.0
GN
15N<146
1.0
GN
3
Y42*1B
Y42a
Electrical exhaust flap
3
Y43*1B
Y43a
Electrical exhaust flap 2
1
2
Y42*1B
S_AKL
0.5
VI
31
1.0
BR
Z10*16B
2
1
Y43*1B
31
1.0
BR
S_AKL2
0.5
VI
Z10*16B
5
X13*1B
S_AKL
0.5
GE
S_AKL
0.5
GE
5
A46*3B
S63 engine
13
A46*3B
N63 engine
48
A46*2B
36
A223*1B
A46
Digital Motor Electronics
36
A45*1B
48
A46*2B
5
A45*3B
S63 engine
13
A45*3B
N63 engine
31
A45
Digital Motor Electronics 2
15
2
U_LHV2
0.75
BL
4
X694*1B
B62201
Oxygen sensor 2 before catalytic converter
3
2
6
1
X694*1B
T_LHV2
0.75
WS
M_LSV2
0.35
SW/WS
A_LSVR2
0.35
GE
A_LSVP2
0.35
GE/WS
1
23
22
9
31 A
31 A
31 A
31 A
31
A45*2B
U_LHH2
0.75
BL
1
X695*1B
B62202
Oxygen sensor 2 after catalytic converter
3
4
2
X695*1B
M_LSH2
0.35
SW/BL
A_LSH2
0.35
GE
T_LHH2
0.75
WS/SW
51
40
7
A45*2B
31 A
31 A
31 A
31
A45
Digital Motor Electronics 2