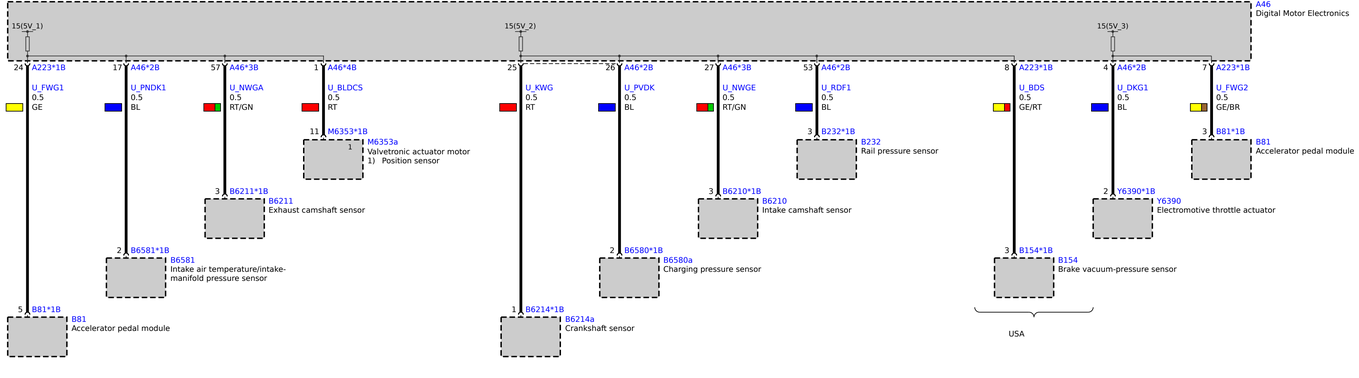
A46
Digital Motor Electronics
15(5V_1)
15(5V_2)
15(5V_3)
24 A223*1B
U_FWG1
0.5
GE
17 A46*2B
U_PNDK1
BL
57 A46*3B
U_NWGA
0.5
RT/GN
1 A46*4B
U_BLDCS
0.5
RT
11 M6353*1B
M6353a
Valvetronic actuator motor
1) Position sensor
3 B6211*1B
B6211
Exhaust camshaft sensor
2 B6581*1B
B6581
Intake air temperature/intake-manifold pressure sensor
5 B81*1B
B81
Accelerator pedal module
25
U_KWG
0.5
RT
26 A46*2B
U_PVDK
0.5
BL
27 A46*3B
U_NWGE
0.5
RT/GN
53 A46*2B
U_RDF1
0.5
BL
3 B232*1B
B232
Rail pressure sensor
3 B6210*1B
B6210
Intake camshaft sensor
2 B6580*1B
B6580a
Charging pressure sensor
1 B6214*1B
B6214a
Crankshaft sensor
8 A223*1B
U_BDS
0.5
GE/RT
4 A46*2B
U_DKG1
0.5
BL
7 A223*1B
U_FWG2
0.5
GE/BR
3 B81*1B
B81
Accelerator pedal module
2 Y6390*1B
Y6390
Electromotive throttle actuator
3 B154*1B
B154
Brake vacuum-pressure sensor
USA

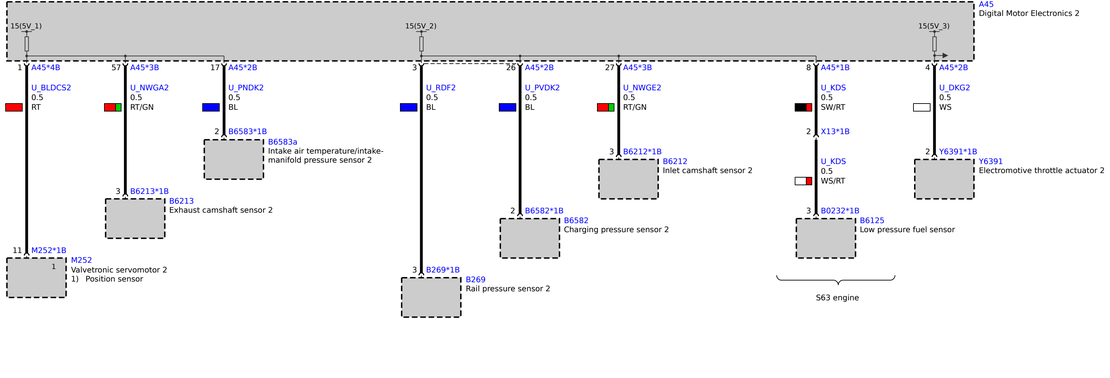
A45
Digital Motor Electronics 2
15(5V_1)
15(5V_2)
15(5V_3)
1 A45*4B
U_BLDCS2
0.5
RT
11 M252*1B
M252
Valvetronic servomotor 2
1) Position sensor
57 A45*3B
U_NWGA2
0.5
RT/GN
3 B6213*1B
B6213
Exhaust camshaft sensor 2
17 A45*2B
U_PNDK2
0.5
BL
2 B6583*1B
B6583a
Intake air temperature/intake-manifold pressure sensor 2
3
U_RDF2
0.5
BL
3 B269*1B
B269
Rail pressure sensor 2
26 A45*2B
U_PVDK2
0.5
BL
2 B6582*1B
B6582
Charging pressure sensor 2
27 A45*3B
U_NWGE2
0.5
RT/GN
3 B6212*1B
B6212
Inlet camshaft sensor 2
8 A45*1B
U_KDS
0.5
SW/RT
2 X13*1B
U_KDS
0.5
WS/RT
3 B0232*1B
B6125
Low pressure fuel sensor
S63 engine
4 A45*2B
U_DKG2
0.5
WS
2 Y6391*1B
Y6391
Electromotive throttle actuator 2