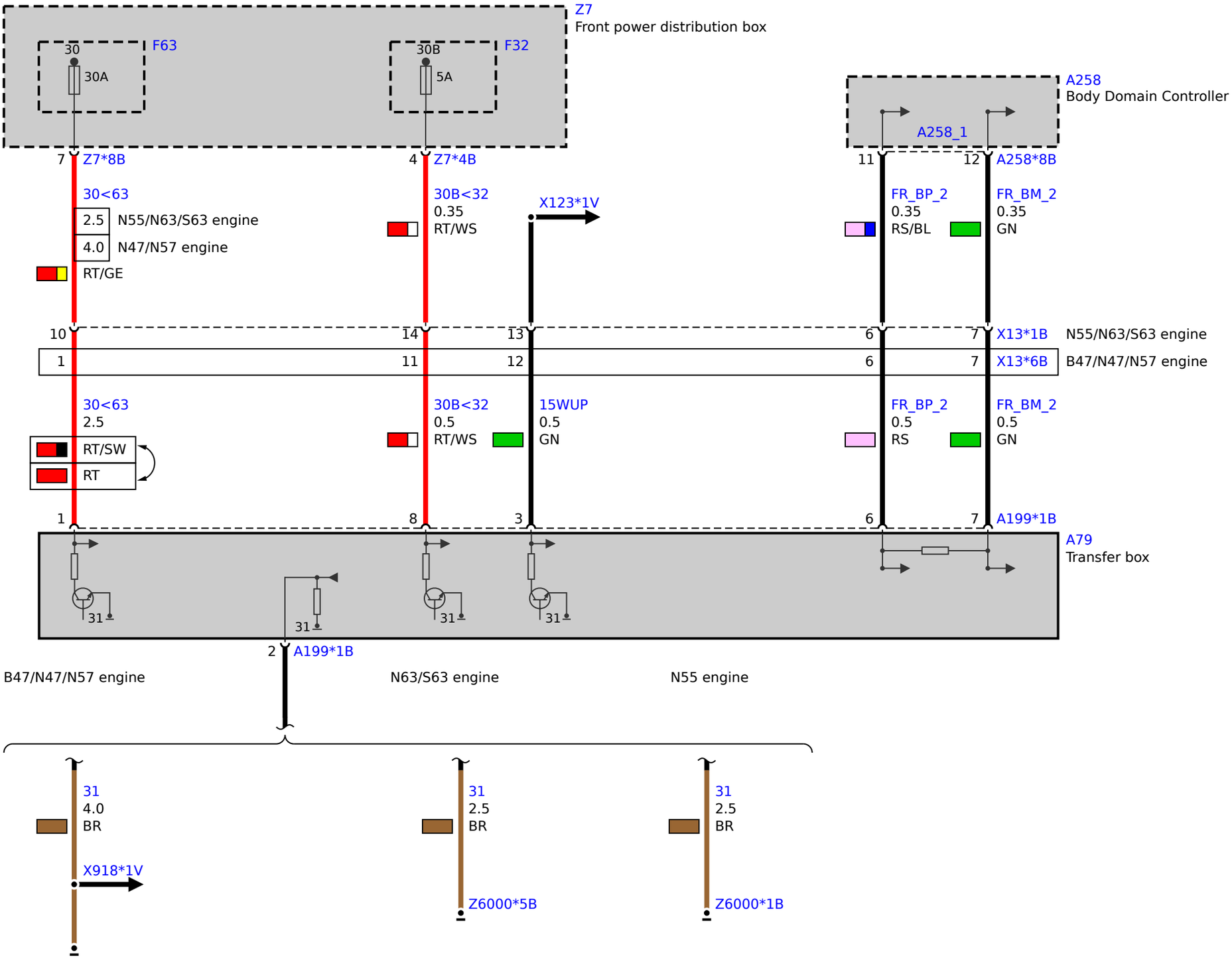
Z7
Front power distribution box
30
F63
30A
30B
F32
5A
A258
Body Domain Controller
A258_1
7
Z7*8B
4
Z7*4B
11
12
A258*8B
30<63
2.5
N55/N63/S63 engine
4.0
N47/N57 engine
RT/GE
30B<32
0.35
RT/WS
X123*1V
FR_BP_2
0.35
RS/BL
FR_BM_2
0.35
GN
10
14
13
6
7
X13*1B
N55/N63/S63 engine
1
11
12
6
7
X13*6B
B47/N47/N57 engine
30<63
2.5
RT/SW
RT
30B<32
0.5
RT/WS
15WUP
0.5
GN
FR_BP_2
0.5
RS
FR_BM_2
0.5
GN
1
8
3
6
7
A199*1B
A79
Transfer box
31
31
31
31
2
A199*1B
B47/N47/N57 engine
N63/S63 engine
N55 engine
31
4.0
BR
X918*1V
31
2.5
BR
Z6000*5B
31
2.5
BR
Z6000*1B