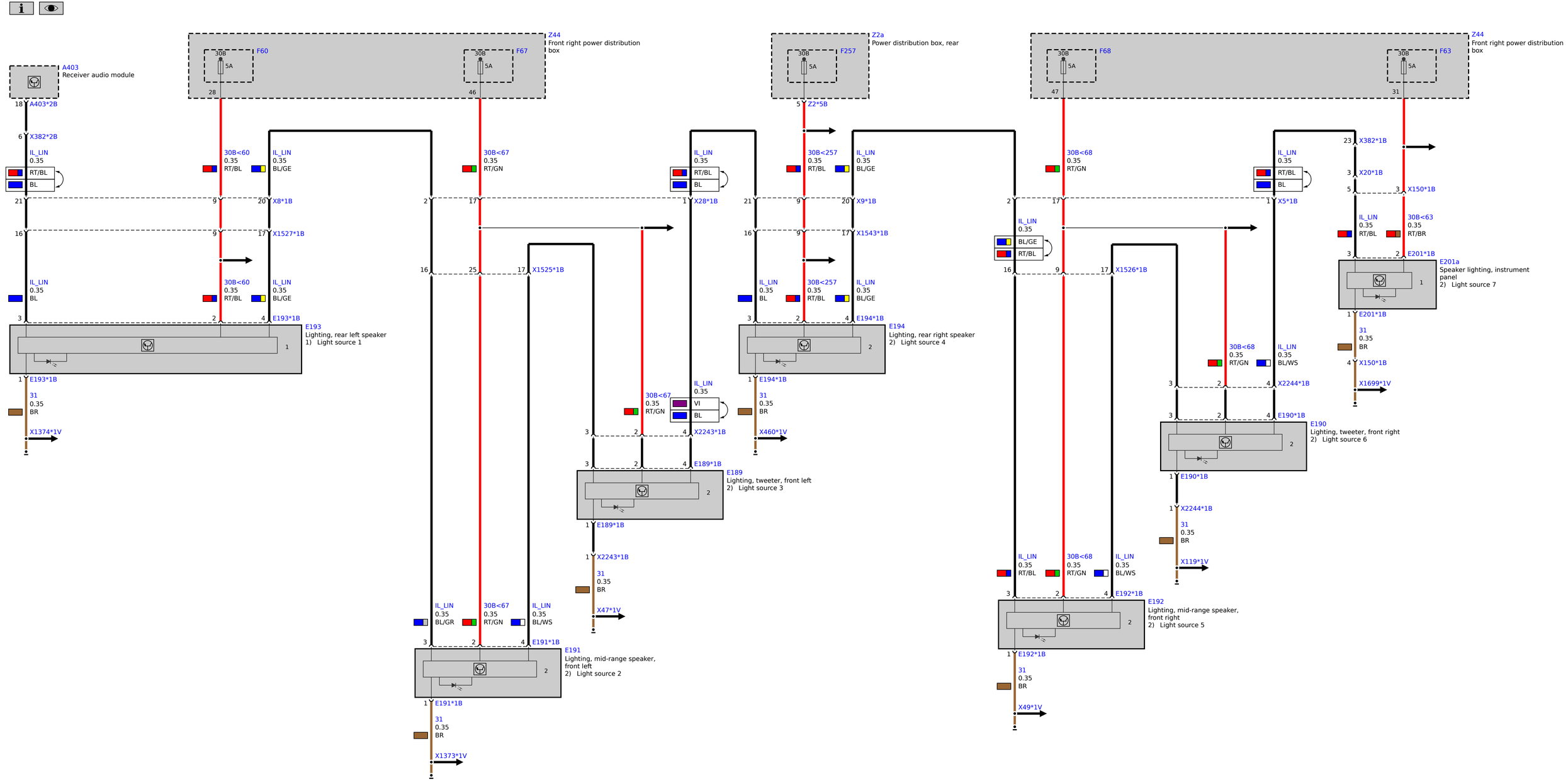
A403
Receiver audio module
Z44
Front right power distribution box
F60
F67
Z2a
Power distribution box, rear
F257
F68
F63
30B
5A
A403*2B
X382*2B
IL_LIN
0.35
RT/BL
BL
30B<60
30B<67
30B<257
30B<68
30B<63
RT/GN
BL/GE
X8*1B
X1527*1B
X28*1B
X1525*1B
X9*1B
X1543*1B
X5*1B
X1526*1B
X382*1B
X20*1B
X150*1B
E193*1B
E193
Lighting, rear left speaker
1) Light source 1
X1374*1V
X2243*1B
E189*1B
E189
Lighting, tweeter, front left
2) Light source 3
X47*1V
E194*1B
E194
Lighting, rear right speaker
2) Light source 4
X460*1V
E191*1B
E191
Lighting, mid-range speaker, front left
2) Light source 2
X1373*1V
E192*1B
E192
Lighting, mid-range speaker, front right
2) Light source 5
X49*1V
E190*1B
E190
Lighting, tweeter, front right
2) Light source 6
X2244*1B
X119*1V
E201*1B
E201a
Speaker lighting, instrument panel
2) Light source 7
X150*1B
X1699*1V
31
BR
VI
BL/GR
BL/WS