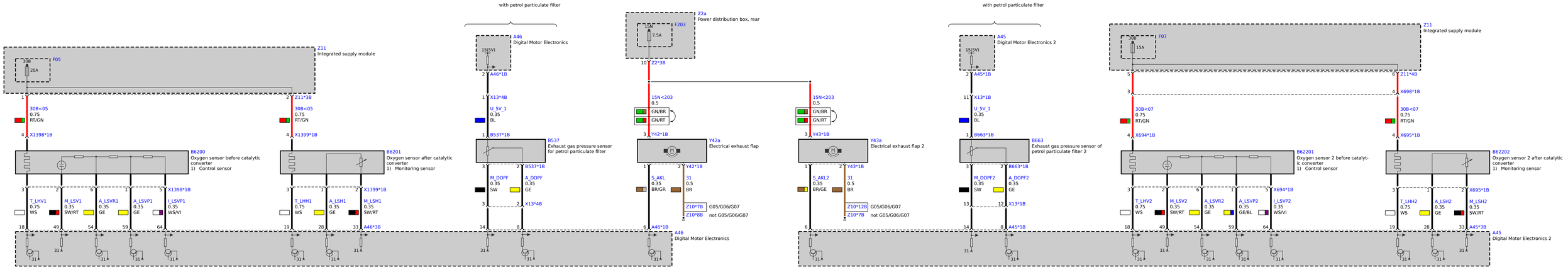
with petrol particulate filter
with petrol particulate filter
Z11
Integrated supply module
F05
30B
20A
30B<05
0.75
RT/GN
X1398*1B
Z11*3B
X1399*1B
B6200
Oxygen sensor before catalytic converter
1) Control sensor
B6201
Oxygen sensor after catalytic converter
1) Monitoring sensor
T_LHV1
0.75
WS
M_LSV1
0.35
SW/RT
A_LSVR1
0.35
GE
A_LSVP1
0.35
GE
I_LSVP1
0.35
WS/VI
X1398*1B
T_LHH1
0.75
WS
A_LSH1
0.35
GE
M_LSH1
0.35
SW/RT
X1399*1B
A46*3B
A46
Digital Motor Electronics
15(5V)
A46*1B
X13*4B
U_5V_1
0.35
BL
B537*1B
B537
Exhaust gas pressure sensor for petrol particulate filter
M_DOPF
0.35
SW
A_DOPF
0.35
GE
X13*4B
Z2a
Power distribution box, rear
15N
F203
7.5A
Z2*3B
15N<203
0.5
GN/BR
GN/RT
Y42*1B
Y42a
Electrical exhaust flap
S_AKL
0.35
BR/GR
31
0.5
BR
Z10*7B
G05/G06/G07
Z10*8B
not G05/G06/G07
A45
Digital Motor Electronics 2
A45*1B
X13*1B
B663*1B
B663
Exhaust gas pressure sensor of petrol particulate filter 2
M_DOPF2
0.35
SW
A_DOPF2
0.35
GE
Y43*1B
Y43a
Electrical exhaust flap 2
S_AKL2
0.35
BR/GE
Z10*12B
Z10*7B
F07
15A
Z11*4B
X69B*1B
30B<07
0.75
RT/GN
X694*1B
X695*1B
B62201
Oxygen sensor 2 before catalytic converter
1) Control sensor
B62202
Oxygen sensor 2 after catalytic converter
1) Monitoring sensor
T_LHV2
0.75
WS
M_LSV2
0.35
SW/RT
A_LSVR2
0.35
GE
A_LSVP2
0.35
GE/BL
I_LSVP2
0.35
WS/VI
T_LHH2
0.75
WS
A_LSH2
0.35
GE
M_LSH2
0.35
SW/RT
31 A