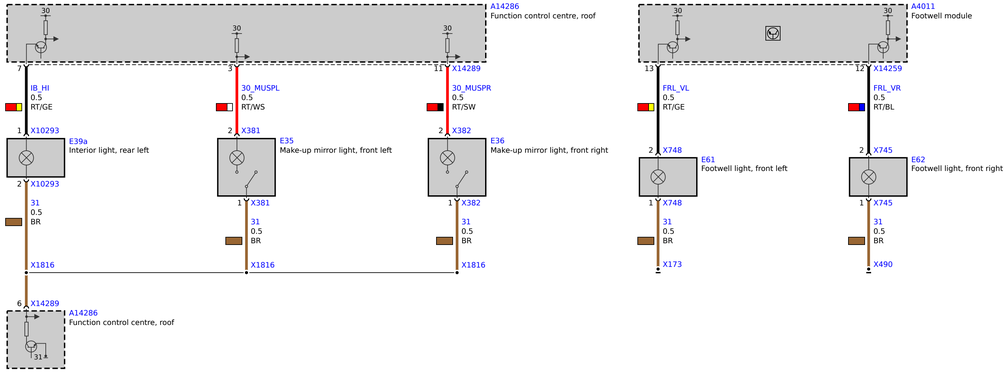
A14286
Function control centre, roof
30
7
IB_HI
0.5
RT/GE
1
X10293
E39a
Interior light, rear left
2
X10293
31
0.5
BR
X1816
6
X14289
A14286
Function control centre, roof
31
30
5
30_MUSPL
0.5
RT/WS
2
X381
E35
Make-up mirror light, front left
1
X381
31
0.5
BR
X1816
30
11
X14289
30_MUSPR
0.5
RT/SW
2
X382
E36
Make-up mirror light, front right
1
X382
31
0.5
BR
X1816
A4011
Footwell module
30
13
FRL_VL
0.5
RT/GE
2
X748
E61
Footwell light, front left
1
X748
31
0.5
BR
X173
30
12
X14259
FRL_VR
0.5
RT/BL
2
X745
E62
Footwell light, front right
1
X745
31
0.5
BR
X490

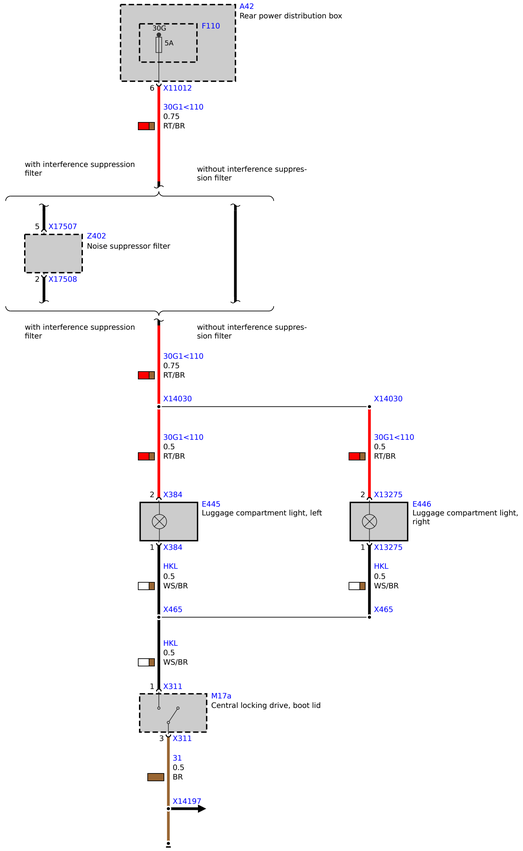
A42
Rear power distribution box
30G
F110
5A
6
X11012
30G1<110
0.75
RT/BR
with interference suppression filter
without interference suppression filter
5
X17507
Z402
Noise suppressor filter
2
X17508
with interference suppression filter
without interference suppression filter
30G1<110
0.75
RT/BR
X14030
X14030
30G1<110
0.5
RT/BR
30G1<110
0.5
RT/BR
2
X384
E445
Luggage compartment light, left
1
X384
HKL
0.5
WS/BR
2
X13275
E446
Luggage compartment light, right
1
X13275
HKL
0.5
WS/BR
X465
X465
HKL
0.5
WS/BR
1
X311
M17a
Central locking drive, boot lid
3
X311
31
0.5
BR
X14197

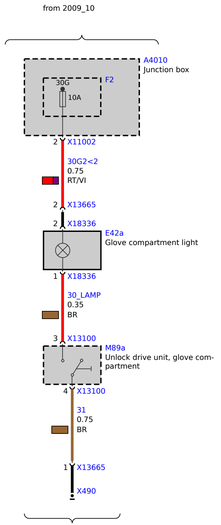
from 2009_10
A4010
Junction box
30G
F2
10A
2
X11002
30G2<2
0.75
RT/VI
2
X13665
2
X18336
E42a
Glove compartment light
1
X18336
30_LAMP
0.35
BR
3
X13100
M89a
Unlock drive unit, glove compartment
4
X13100
31
0.75
BR
1
X13665
X490
from 2009_10

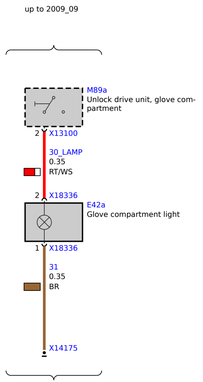
up to 2009_09
M89a
Unlock drive unit, glove compartment
2
X13100
30_LAMP
0.35
RT/WS
2
X18336
E42a
Glove compartment light
1
X18336
31
0.35
BR
X14175
up to 2009_09

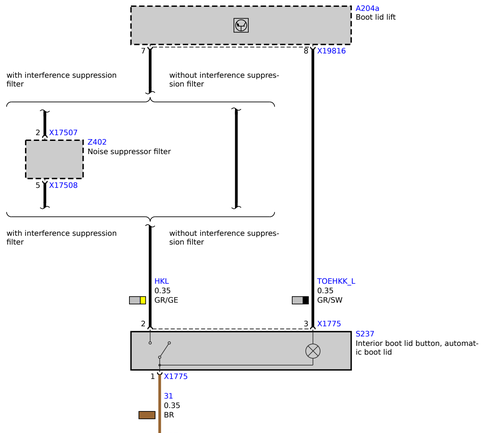
A204a
Boot lid lift
7
8
X19816
with interference suppression filter
without interference suppression filter
2
X17507
Z402
Noise suppressor filter
5
X17508
with interference suppression filter
without interference suppression filter
HKL
0.35
GR/GE
TOEHKK_L
0.35
GR/SW
2
3
X1775
S237
Interior boot lid button, automatic boot lid
1
X1775
31
0.35
BR
X151