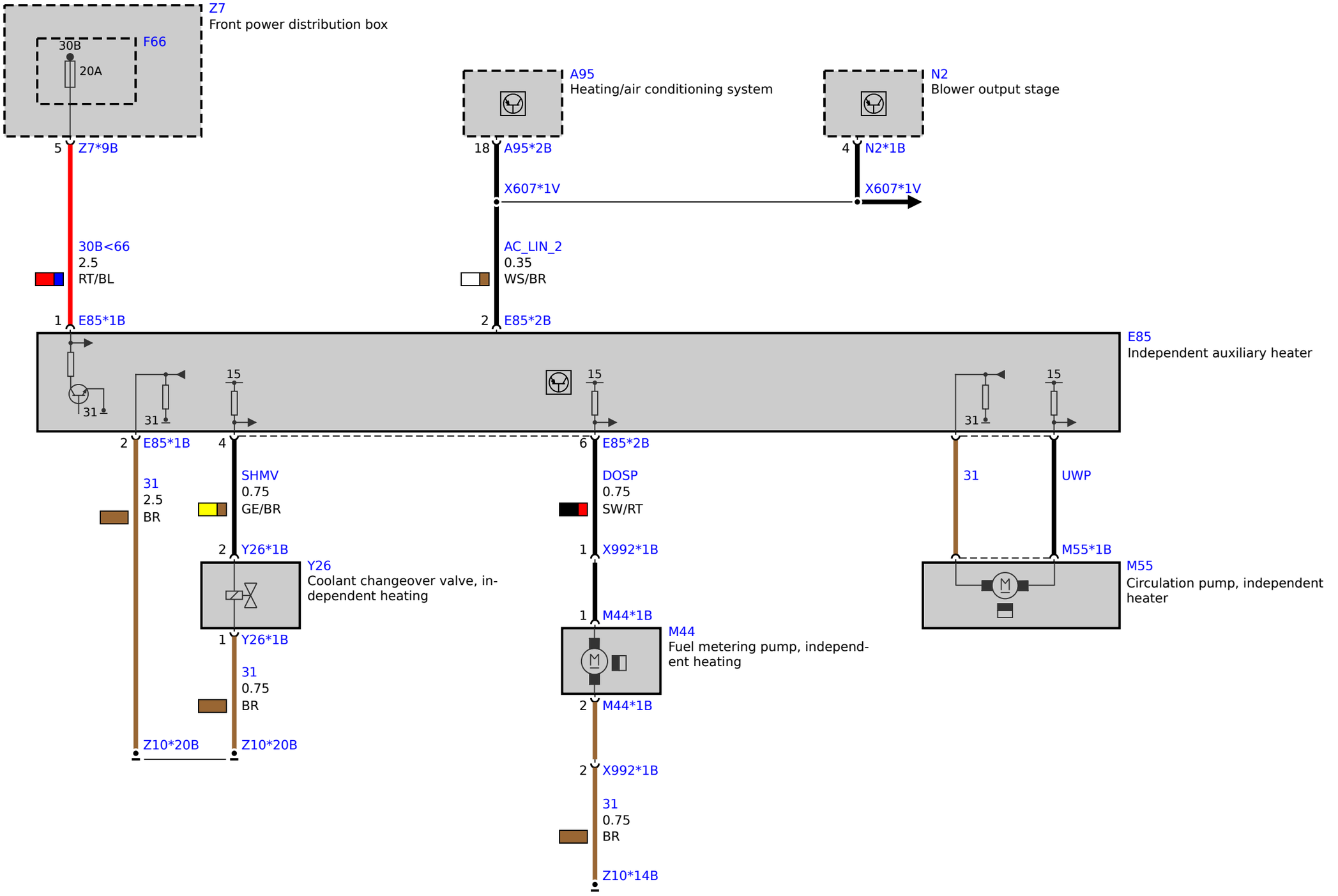
Z7
Front power distribution box
F66
30B
20A
5
Z7*9B
30B<66
2.5
RT/BL
1
E85*1B
A95
Heating/air conditioning system
18
A95*2B
X607*1V
AC_LIN_2
0.35
WS/BR
2
E85*2B
N2
Blower output stage
4
N2*1B
X607*1V
E85
Independent auxiliary heater
31
15
2
E85*1B
31
2.5
BR
Z10*20B
4
SHMV
0.75
GE/BR
2
Y26*1B
Y26
Coolant changeover valve, independent heating
1
Y26*1B
31
0.75
BR
Z10*20B
6
E85*2B
DOSP
0.75
SW/RT
1
X992*1B
1
M44*1B
M44
Fuel metering pump, independent heating
2
M44*1B
2
X992*1B
31
0.75
BR
Z10*14B
31
UWP
M55*1B
M55
Circulation pump, independent heater