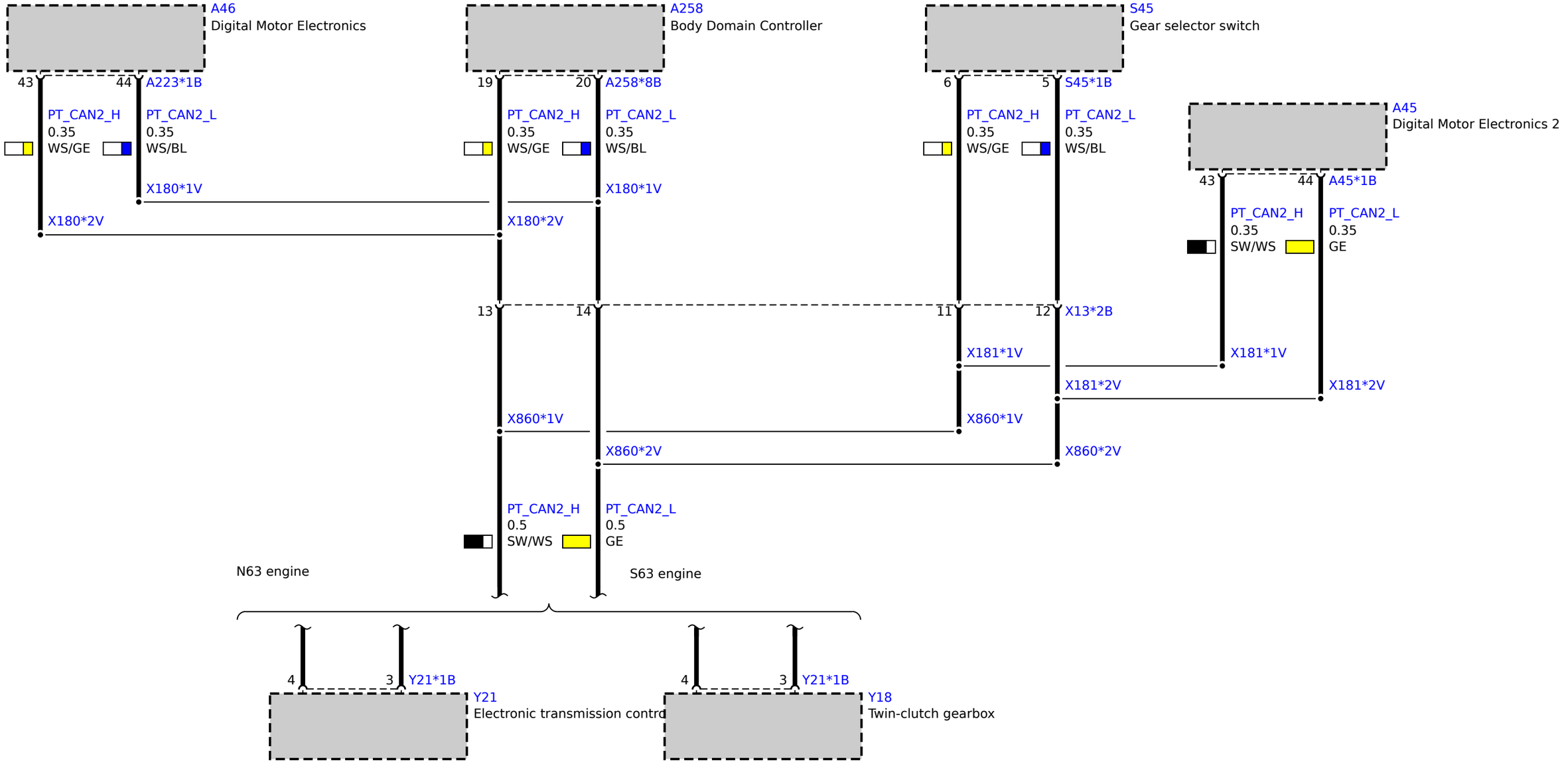
A46
Digital Motor Electronics
A258
Body Domain Controller
S45
Gear selector switch
A45
Digital Motor Electronics 2
43
44
A223*1B
PT_CAN2_H
0.35
WS/GE
PT_CAN2_L
0.35
WS/BL
X180*1V
X180*2V
19
20
A258*8B
PT_CAN2_H
0.35
WS/GE
PT_CAN2_L
0.35
WS/BL
X180*1V
X180*2V
6
5
S45*1B
PT_CAN2_H
0.35
WS/GE
PT_CAN2_L
0.35
WS/BL
43
44
A45*1B
PT_CAN2_H
0.35
SW/WS
PT_CAN2_L
0.35
GE
13
14
11
12
X13*2B
X181*1V
X181*1V
X181*2V
X181*2V
X860*1V
X860*1V
X860*2V
X860*2V
PT_CAN2_H
0.5
SW/WS
PT_CAN2_L
0.5
GE
N63 engine
S63 engine
4
3
Y21*1B
Y21
Electronic transmission contro
4
3
Y21*1B
Y18
Twin-clutch gearbox