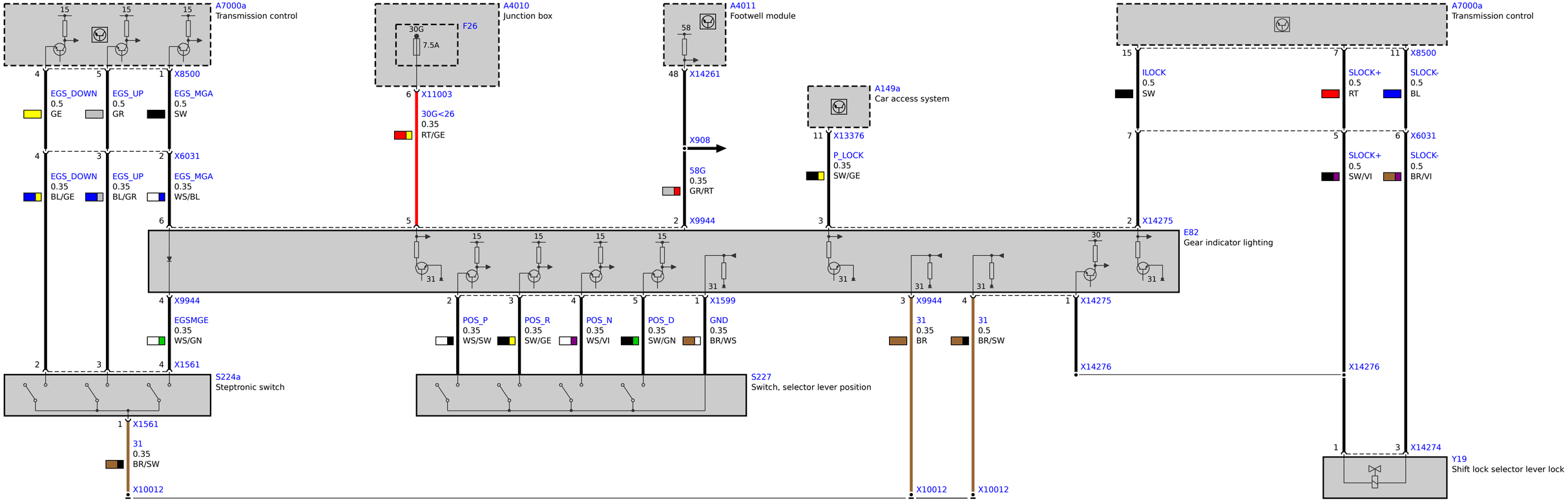
A7000a
Transmission control
15
15
15
4
5
1
X8500
EGS_DOWN
0.5
GE
EGS_UP
0.5
GR
EGS_MGA
0.5
SW
4
3
2
X6031
EGS_DOWN
0.35
BL/GE
EGS_UP
0.35
BL/GR
EGS_MGA
0.35
WS/BL
A4010
Junction box
30G
F26
7.5A
6
X11003
30G<26
0.35
RT/GE
A4011
Footwell module
58
48
X14261
X908
58G
0.35
GR/RT
A149a
Car access system
11
X13376
P_LOCK
0.35
SW/GE
A7000a
Transmission control
15
7
11
X8500
ILOCK
0.5
SW
SLOCK+
0.5
RT
SLOCK-
0.5
BL
7
5
6
X6031
SLOCK+
0.5
SW/VI
SLOCK-
0.5
BR/VI
6
5
2
X9944
3
2
X14275
E82
Gear indicator lighting
15
15
15
15
15
31
31
31
31
31
30
31
4
X9944
EGSMGE
0.35
WS/GN
2
3
4
5
1
X1599
POS_P
0.35
WS/SW
POS_R
0.35
SW/GE
POS_N
0.35
WS/VI
POS_D
0.35
SW/GN
GND
0.35
BR/WS
3
X9944
31
0.35
BR
4
31
0.5
BR/SW
1
X14275
X14276
X14276
2
3
4
X1561
S224a
Steptronic switch
S227
Switch, selector lever position
1
X1561
31
0.35
BR/SW
X10012
X10012
X10012
1
3
X14274
Y19
Shift lock selector lever lock