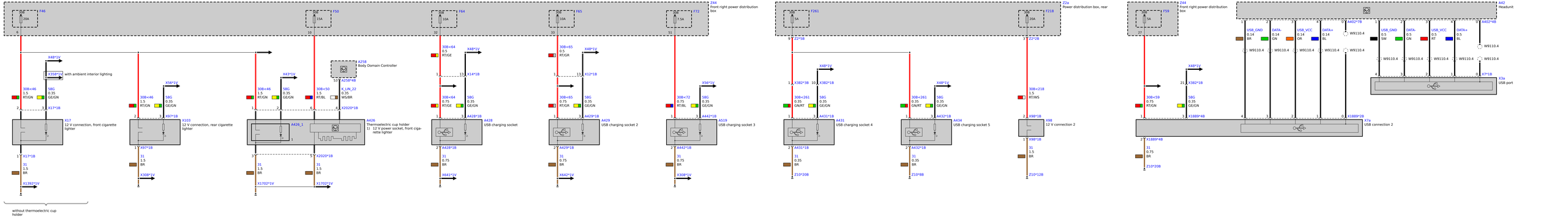
F46
20A
6
X48*1V
X158*1V
with ambient interior lighting
30B<46
1.5
RT/GN
58G
0.35
GE/GN
2
3
X17*1B
X17
12 V connection, front cigarette lighter
1
X17*1B
31
1.5
BR
X1392*1V
without thermoelectric cup holder
F50
15A
10
X56*1V
30B<46
1.5
RT/GN
58G
0.35
GE/GN
X97*1B
X103
12 V connection, rear cigarette lighter
1
X97*1B
31
1.5
BR
X308*1V
X43*1V
30B<46
1.5
RT/GN
58G
0.35
GE/GN
A426_1
30B<50
1.5
RT/BL
K_LIN_22
0.35
WS/BR
X202*1B
A258
Body Domain Controller
53
A258*4B
A426
Thermoelectric cup holder
1) 12 V power socket, front cigarette lighter
3
5
X202*1B
31
1.5
BR
X1702*1V
X1702*1V
F64
10A
32
30B<64
0.5
RT/GE
X48*1V
X14*1B
30B<64
0.75
RT/GE
58G
0.35
GE/GN
A428*1B
A428
USB charging socket
2
A428*1B
31
0.75
BR
X641*1V
F65
10A
33
30B<65
0.5
RT/GR
X48*1V
X12*1B
30B<65
0.75
RT/GR
58G
0.35
GE/GN
A429*1B
A429
USB charging socket 2
2
A429*1B
31
0.75
BR
X642*1V
F72
7.5A
51
X56*1V
30B<72
0.75
RT/BL
58G
0.35
GE/GN
A442*1B
A519
USB charging socket 3
2
A442*1B
31
0.75
BR
X308*1V
Z44
Front right power distribution box
F261
5A
9
Z2*5B
X48*1V
X382*3B
30B<261
0.35
GN/RT
58G
0.35
GE/GN
A431*1B
A431
USB charging socket 4
2
A431*1B
31
0.35
BR
Z10*20B
X48*1V
30B<261
0.35
GN/RT
58G
0.35
GE/GN
A432*1B
A434
USB charging socket 5
2
A432*1B
31
0.35
BR
Z10*8B
F218
20A
3
Z2*2B
30B<218
1.5
RT/WS
X98*1B
X98
12 V connection 2
1
X98*1B
31
1.5
BR
Z10*12B
Z2a
Power distribution box, rear
Z44
Front right power distribution box
F59
5A
27
X48*1V
X382*1B
30B<59
0.75
RT/GN
58G
0.35
GE/GN
X1889*4B
X1889*2B
37a
USB connection 2
2
X1889*4B
31
0.75
BR
Z10*20B
A42
Headunit
USB_GND
0.14
BR
DATA-
0.14
GN
USB_VCC
0.14
OR
DATA+
0.14
BL
A402*7B
W9110.4
USB_GND
0.5
SW
DATA-
0.5
GN
USB_VCC
0.5
RT
DATA+
0.5
BL
A402*4B
X7*1B
X3a
USB port