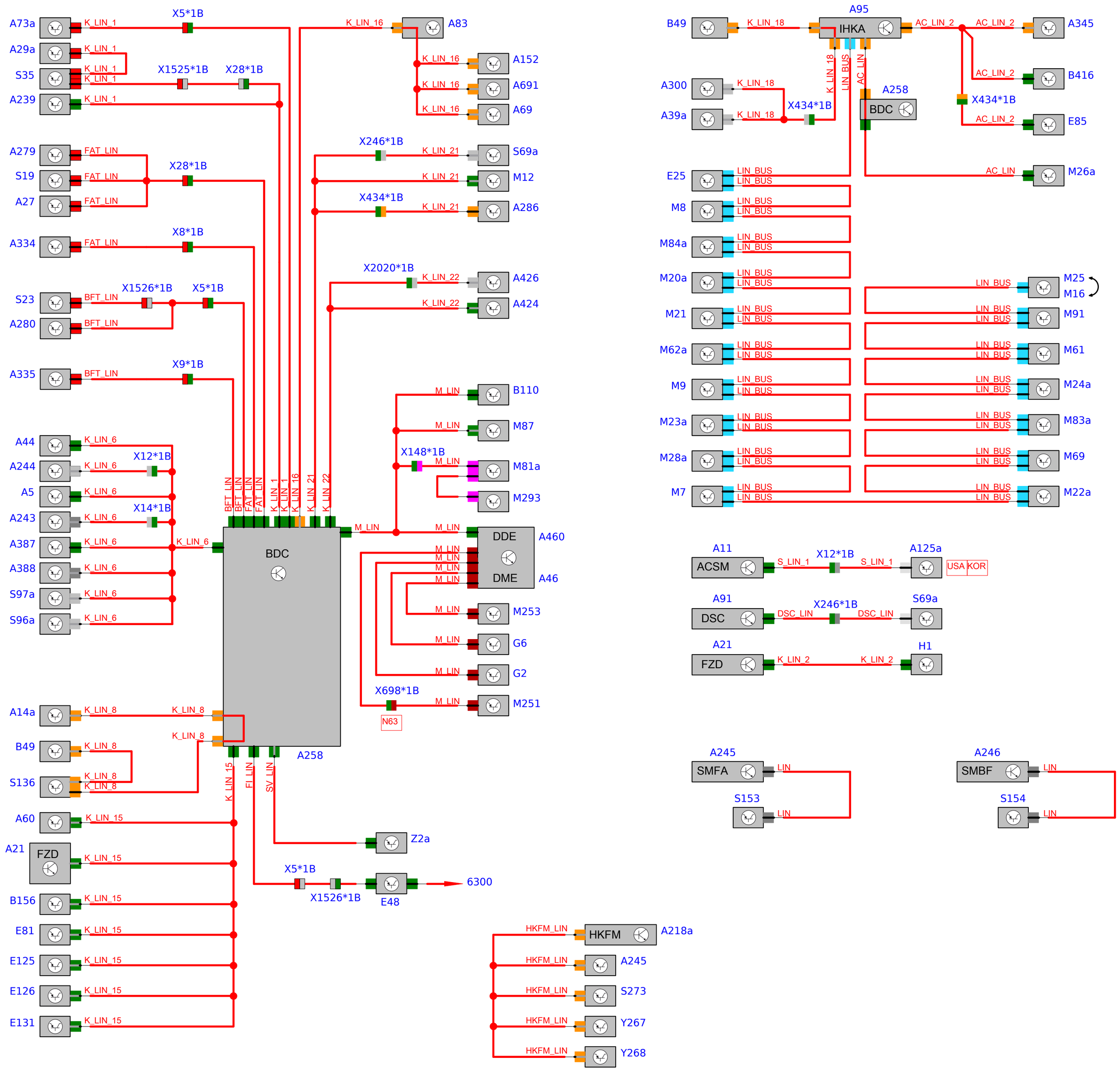
A73a
A29a
S35
A239
K_LIN_1
X5*1B
X1525*1B
X28*1B
A279
S19
A27
FAT_LIN
X28*1B
A334
X8*1B
S23
A280
BFT_LIN
X1526*1B
X5*1B
A335
X9*1B
A44
A244
A5
A243
A387
A388
S97a
S96a
K_LIN_6
X12*1B
X14*1B
A14a
B49
S136
A60
A21
FZD
B156
E81
E125
E126
E131
K_LIN_8
K_LIN_15
BFT_LIN
FAT_LIN
K_LIN_1
K_LIN_16
K_LIN_21
K_LIN_22
K_LIN_16
A83
A152
A691
A69
X246*1B
S69a
M12
X434*1B
A286
X2020*1B
A426
A424
M_LIN
B110
M87
X148*1B
M81a
M293
BDC
A258
DDE
DME
A460
A46
M253
G6
G2
X698*1B
M251
N63
K_LIN_15
FI_LIN
SV_LIN
Z2a
X5*1B
X1526*1B
E48
6300
HKFM_LIN
HKFM
A218a
A245
S273
Y267
Y268
B49
K_LIN_18
A95
IHKA
AC_LIN_2
A345
B416
E85
A300
A39a
X434*1B
A258
BDC
AC_LIN
M26a
E25
M8
M84a
M20a
M21
M62a
M9
M23a
M28a
M7
LIN_BUS
M25
M16
M91
M61
M24a
M83a
M69
M22a
A11
ACSM
S_LIN_1
X12*1B
A125a
USA
KOR
A91
DSC
DSC_LIN
X246*1B
S69a
A21
FZD
K_LIN_2
H1
A245
SMFA
LIN
S153
A246
SMBF
S154