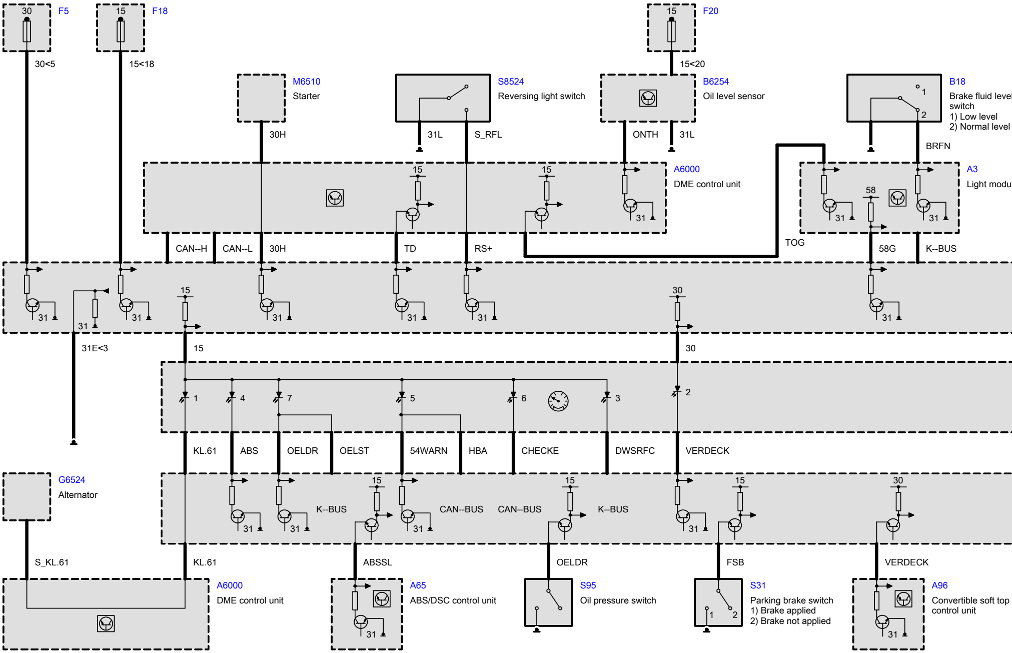
30
F5
15
F18
15
F20
30<5
15<18
15<20
M6510
Starter
S8524
Reversing light switch
B6254
Oil level sensor
B18
Brake fluid level switch
1) Low level
2) Normal level
1
2
30H
31L
S_RFL
ONTH
31L
BRFN
A6000
DME control unit
A3
Light modu
15
15
58
31
31
31
31
TOG
CAN--H
CAN--L
30H
TD
RS+
58G
K--BUS
15
30
31
31
31
31
31
31
31
31
31E<3
15
30
1
4
7
5
6
3
2
KL.61
ABS
OELDR
OELST
54WARN
HBA
CHECKE
DWSRFC
VERDECK
G6524
Alternator
K--BUS
CAN--BUS
CAN--BUS
K--BUS
15
15
15
30
31
31
31
31
S_KL.61
KL.61
ABSSL
OELDR
FSB
VERDECK
A6000
DME control unit
A65
ABS/DSC control unit
S95
Oil pressure switch
S31
Parking brake switch
1) Brake applied
2) Brake not applied
1
2
A96
Convertible soft top control unit
31
31

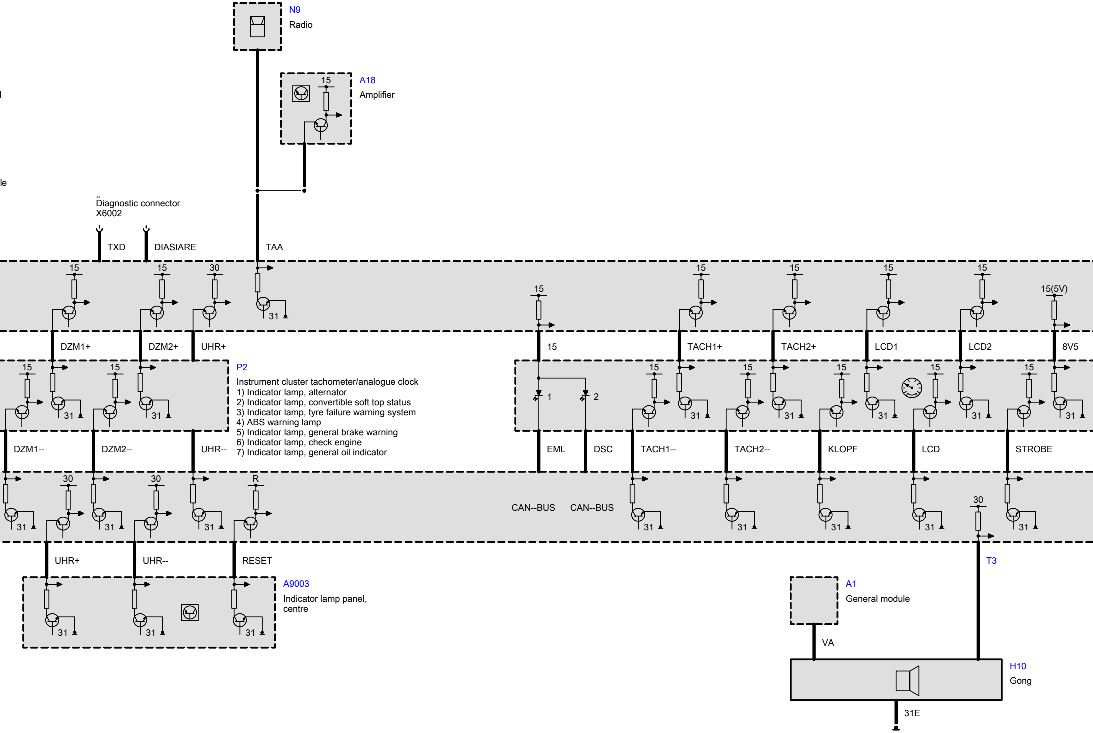

l
le
N9
Radio
A18
Amplifier
15
Diagnostic connector
X6002
TXD
DIASIARE
TAA
15
15
30
31
15
15
15
15
15
15(5V)
DZM1+
DZM2+
UHR+
15
TACH1+
TACH2+
LCD1
LCD2
8V5
P2
Instrument cluster tachometer/analogue clock
1) Indicator lamp, alternator
2) Indicator lamp, convertible soft top status
3) Indicator lamp, tyre failure warning system
4) ABS warning lamp
5) Indicator lamp, general brake warning
6) Indicator lamp, check engine
7) Indicator lamp, general oil indicator
1
2
DZM1--
DZM2--
UHR--
EML
DSC
TACH1--
TACH2--
KLOPF
LCD
STROBE
30
30
R
CAN--BUS
CAN--BUS
30
31
UHR+
UHR--
RESET
T3
A9003
Indicator lamp panel,
centre
A1
General module
VA
H10
Gong
31E

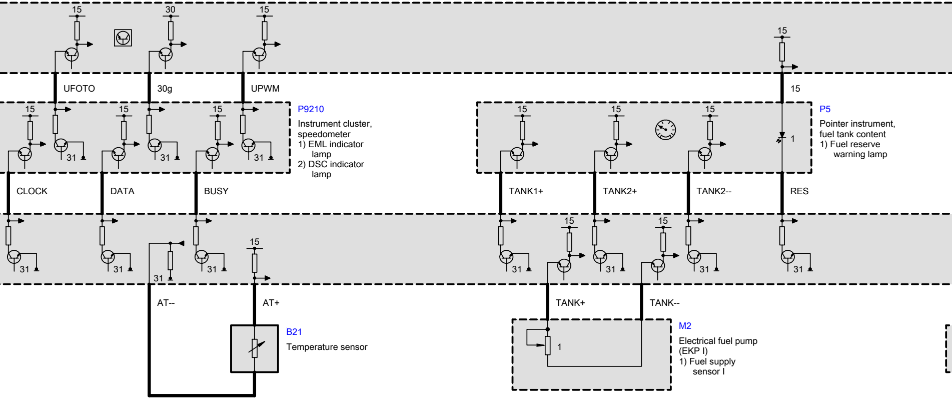
15
30
15
15
UFOTO
30g
UPWM
15
15
15
15
31
31
31
CLOCK
DATA
BUSY
31
31
31
31
15
AT--
AT+
15
15
15
1
TANK1+
TANK2+
TANK2--
RES
15
15
31
31
31
31
TANK+
TANK--
1

P9210
Instrument cluster, speedometer
1) EML indicator lamp
2) DSC indicator lamp

P5
Pointer instrument, fuel tank content
1) Fuel reserve warning lamp

B21
Temperature sensor

M2
Electrical fuel pump (EKP I)
1) Fuel supply sensor I

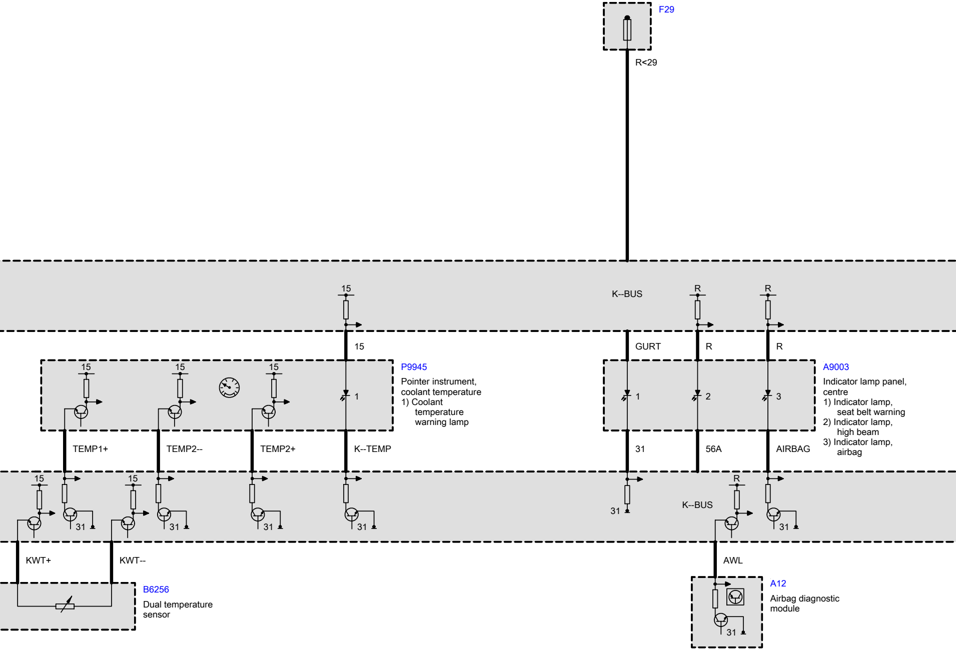
F29
R<29
15
K--BUS
R
R
15
GURT
R
R
P9945
Pointer instrument, coolant temperature
1) Coolant temperature warning lamp
15
15
15
1
A9003
Indicator lamp panel, centre
1) Indicator lamp, seat belt warning
2) Indicator lamp, high beam
3) Indicator lamp, airbag
1
2
3
TEMP1+
TEMP2--
TEMP2+
K--TEMP
31
56A
AIRBAG
15
15
R
31
31
31
31
31
K--BUS
31
KWT+
KWT--
AWL
B6256
Dual temperature sensor
A12
Airbag diagnostic module
31

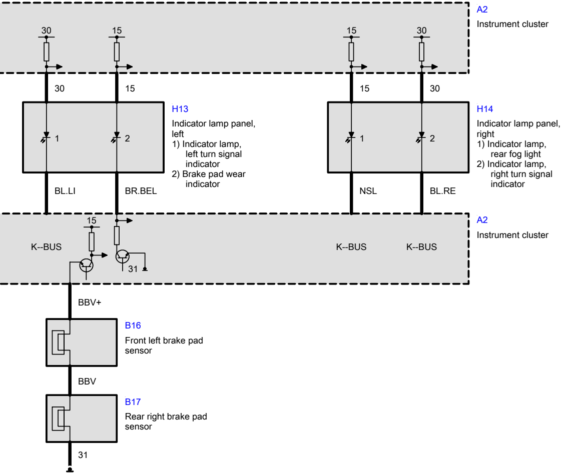
A2
Instrument cluster
30
15
15
30
30
15
15
30
H13
Indicator lamp panel, left
1) Indicator lamp, left turn signal indicator
2) Brake pad wear indicator
1
2
1
2
H14
Indicator lamp panel, right
1) Indicator lamp, rear fog light
2) Indicator lamp, right turn signal indicator
BL.LI
BR.BEL
NSL
BL.RE
A2
Instrument cluster
15
K--BUS
31
K--BUS
K--BUS
BBV+
B16
Front left brake pad sensor
BBV
B17
Rear right brake pad sensor
31