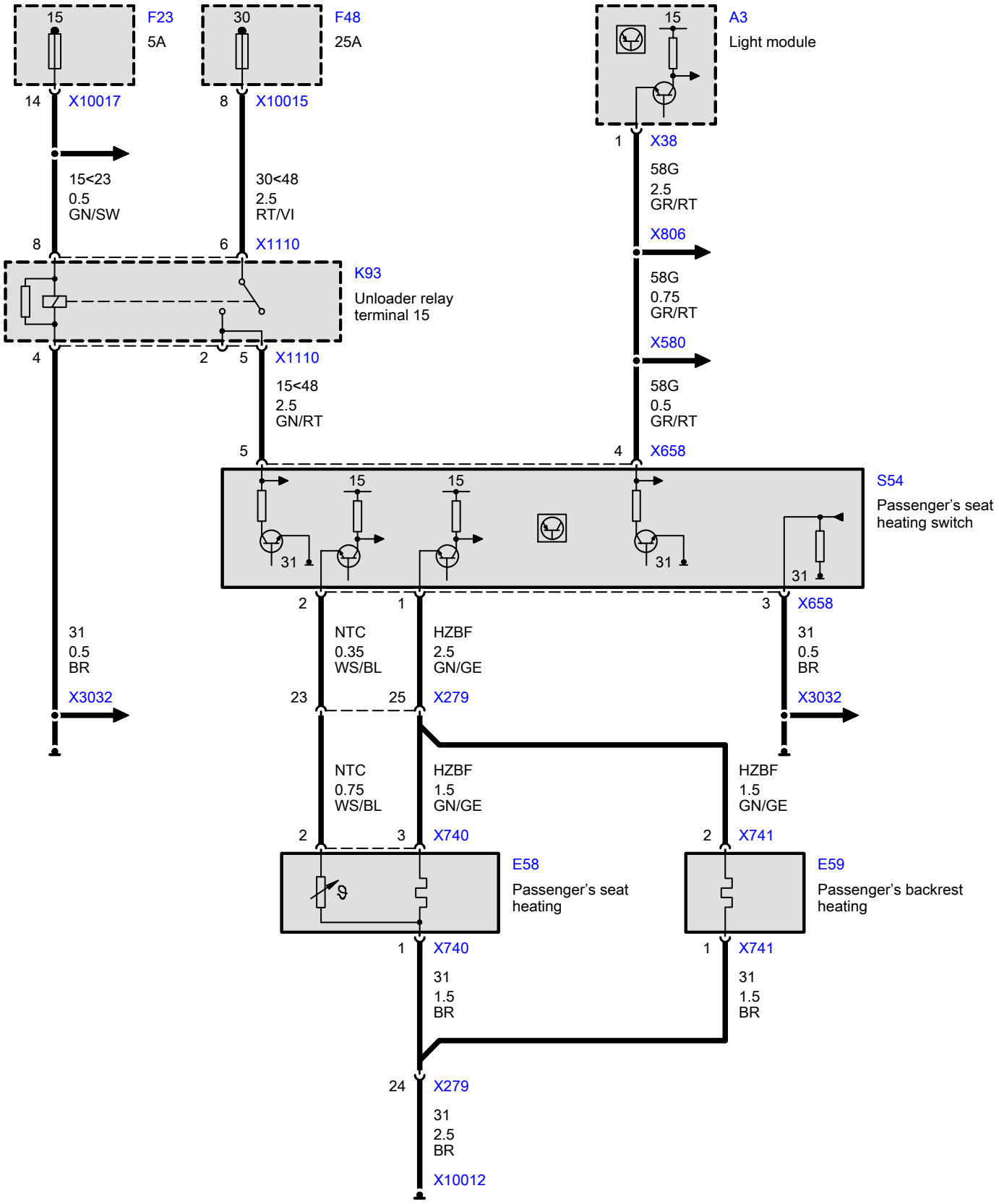
15
F23
5A
30
F48
25A
15
A3
Light module
14
X10017
8
X10015
1
X38
15<23
0.5
GN/SW
30<48
2.5
RT/VI
58G
2.5
GR/RT
X806
8
6
X1110
K93
Unloader relay
terminal 15
58G
0.75
GR/RT
X580
4
2
5
X1110
15<48
2.5
GN/RT
58G
0.5
GR/RT
5
4
X658
15
15
S54
Passenger's seat
heating switch
31
31
31
2
1
3
X658
31
0.5
BR
NTC
0.35
WS/BL
HZBF
2.5
GN/GE
31
0.5
BR
X3032
23
25
X279
X3032
NTC
0.75
WS/BL
HZBF
1.5
GN/GE
HZBF
1.5
GN/GE
2
3
X740
2
X741
E58
Passenger's seat
heating
E59
Passenger's backrest
heating
1
X740
1
X741
31
1.5
BR
31
1.5
BR
24
X279
31
2.5
BR
X10012