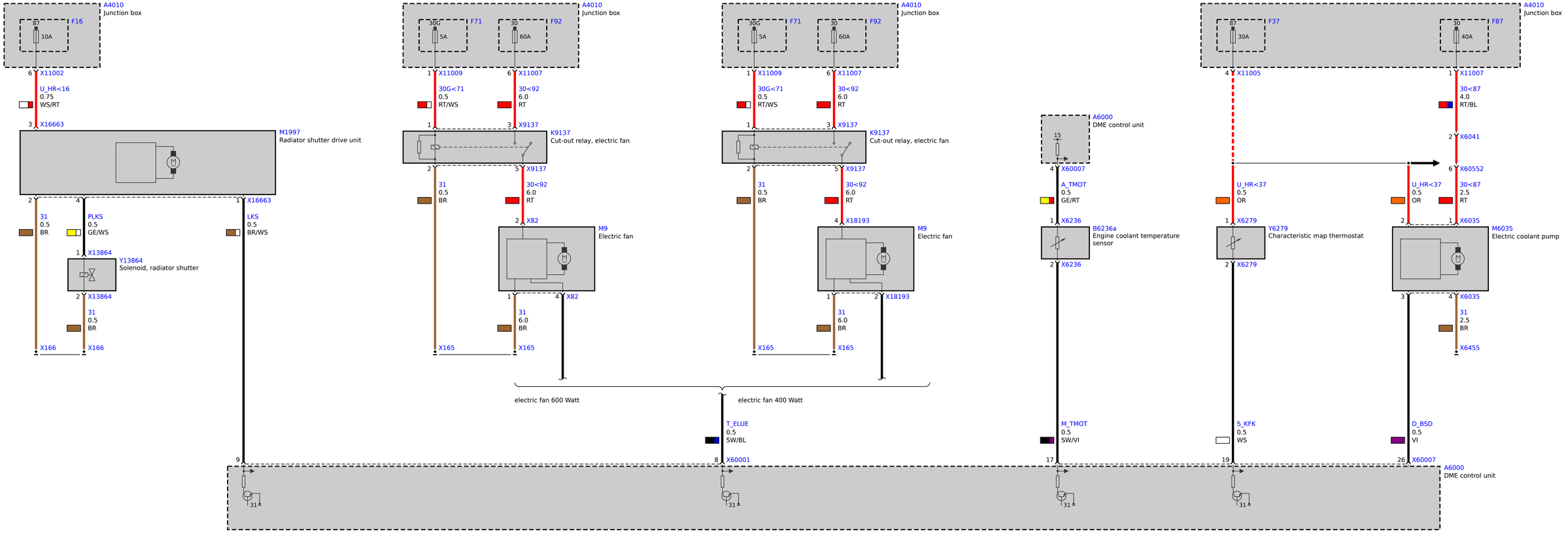
A4010
Junction box
87
F16
10A
6
X11002
U_HR<16
0.75
WS/RT
3
X16663
M1997
Radiator shutter drive unit
2
4
1
X16663
31
0.5
BR
PLKS
0.5
GE/WS
LKS
0.5
BR/WS
1
X13864
Y13864
Solenoid, radiator shutter
2
X13864
31
0.5
BR
X166
X166
A4010
Junction box
30G
F71
5A
30
F92
60A
1
X11009
6
X11007
30G<71
0.5
RT/WS
30<92
6.0
RT
1
3
X9137
K9137
Cut-out relay, electric fan
2
5
X9137
31
0.5
BR
30<92
6.0
RT
2
X82
M9
Electric fan
1
4
X82
31
6.0
BR
X165
X165
A4010
Junction box
30G
F71
5A
30
F92
60A
1
X11009
6
X11007
30G<71
0.5
RT/WS
30<92
6.0
RT
1
3
X9137
K9137
Cut-out relay, electric fan
2
5
X9137
31
0.5
BR
30<92
6.0
RT
4
X18193
M9
Electric fan
1
2
X18193
31
6.0
BR
X165
X165
A6000
DME control unit
15
4
X60007
A_TMOT
0.5
GE/RT
1
X6236
B6236a
Engine coolant temperature sensor
2
X6236
A4010
Junction box
87
F37
30A
30
F87
40A
4
X11005
1
X11007
30<87
4.0
RT/BL
2
X6041
6
X60552
U_HR<37
0.5
OR
U_HR<37
0.5
OR
30<87
2.5
RT
1
X6279
Y6279
Characteristic map thermostat
2
X6279
2
1
X6035
M6035
Electric coolant pump
3
4
X6035
31
2.5
BR
X6455
electric fan 600 Watt
electric fan 400 Watt
T_ELUE
0.5
SW/BL
M_TMOT
0.5
SW/VI
S_KFK
0.5
WS
D_BSD
0.5
VI
9
8
X60001
17
19
26
X60007
A6000
DME control unit
31
31
31
31