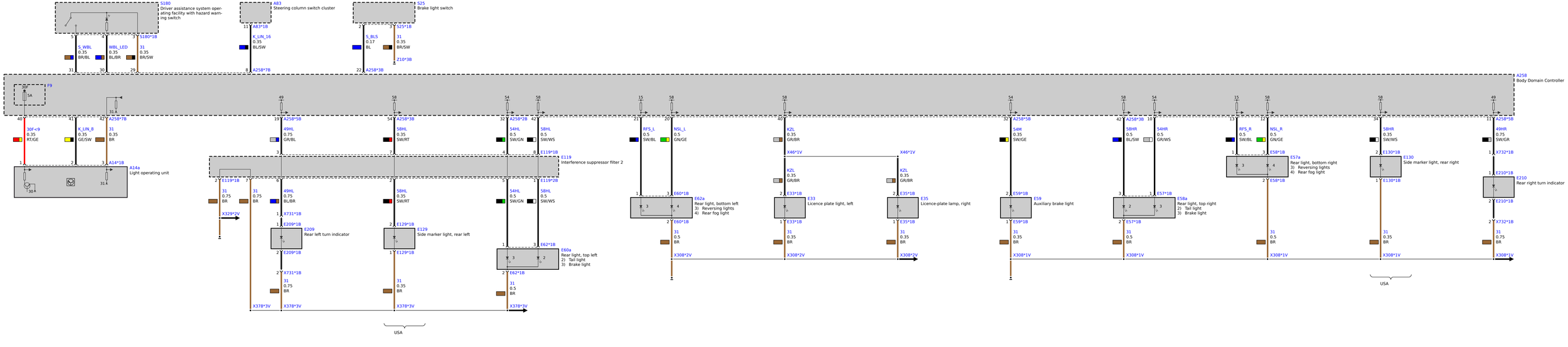
S180
Driver assistance system operating facility with hazard warning switch
S_WBL 0.35 BR/BL
WBL_LED 0.35 BL/BR
31 0.35 BR/SW
S180*1B
A83
Steering column switch cluster
A83*1B
K_LIN_16 0.35 BL/SW
A258*7B
S25
Brake light switch
S25*1B
S_BLS 0.17 BL
31 0.35 BR/SW
Z10*3B
A258*3B
A258
Body Domain Controller
F9
30
5A
30F<9 0.35 RT/GE
K_LIN_8 0.35 GE/SW
31 0.35 BR
A258*7B
A14a
Light operating unit
A14*1B
49HL 0.75 GR/BL
A258*5B
58HL 0.35 SW/RT
A258*3B
54HL 0.5 SW/GN
A258*2B
58HL 0.5 SW/WS
E119*1B
E119
Interference suppressor filter 2
E119*1B
31 0.75 BR
X329*2V
49HL 0.75 BL/BR
X731*1B
E209*1B
E209
Rear left turn indicator
E209*1B
X731*1B
31 0.75 BR
X378*3V
58HL 0.35 SW/RT
E129*1B
E129
Side marker light, rear left
E129*1B
31 0.35 BR
X378*3V
USA
54HL 0.5 SW/GN
58HL 0.5 SW/WS
E119*2B
E62*1B
E60a
Rear light, top left
2) Tail light
3) Brake light
E62*1B
31 0.5 BR
X378*3V
RFS_L 0.5 SW/BL
NSL_L 0.5 GN/GE
E60*1B
E62a
Rear light, bottom left
3) Reversing lights
4) Rear fog light
E60*1B
31 0.5 BR
X308*2V
KZL 0.35 GR/BR
X46*1V
KZL 0.35 GR/BR
E33*1B
E33
Licence plate light, left
E33*1B
31 0.35 BR
X308*2V
KZL 0.35 GR/BR
E35*1B
E35
Licence-plate lamp, right
E35*1B
31 0.35 BR
X308*2V
54M 0.35 SW/GE
A258*5B
E59*1B
E59
Auxiliary brake light
E59*1B
31 0.35 BR
X308*1V
58HR 0.5 BL/SW
54HR 0.5 GR/WS
A258*3B
E57*1B
E58a
Rear light, top right
2) Tail light
3) Brake light
E57*1B
31 0.5 BR
X308*1V
RFS_R 0.5 SW/BL
NSL_R 0.5 GN/GE
E58*1B
E57a
Rear light, bottom right
3) Reversing lights
4) Rear fog light
E58*1B
31 0.5 BR
X308*1V
58HR 0.35 SW/WS
E130*1B
E130
Side marker light, rear right
E130*1B
31 0.35 BR
X308*1V
USA
49HR 0.75 SW/GR
A258*5B
X732*1B
E210*1B
E210
Rear right turn indicator
E210*1B
X732*1B
31 0.75 BR
X308*1V