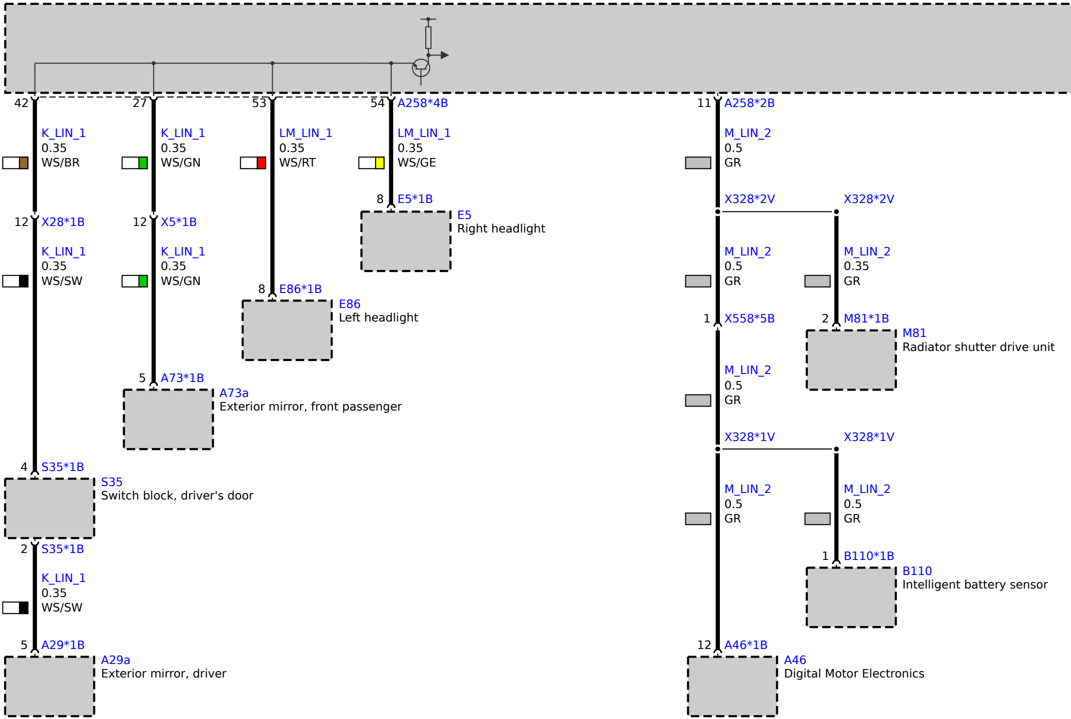
42
K_LIN_1
0.35
WS/BR
12
X28*1B
K_LIN_1
0.35
WS/SW
4
S35*1B
S35
Switch block, driver's door
2
S35*1B
K_LIN_1
0.35
WS/SW
5
A29*1B
A29a
Exterior mirror, driver
27
K_LIN_1
0.35
WS/GN
12
X5*1B
K_LIN_1
0.35
WS/GN
5
A73*1B
A73a
Exterior mirror, front passenger
53
LM_LIN_1
0.35
WS/RT
8
E86*1B
E86
Left headlight
54
A258*4B
LM_LIN_1
0.35
WS/GE
8
E5*1B
E5
Right headlight
11
A258*2B
M_LIN_2
0.5
GR
X328*2V
X328*2V
M_LIN_2
0.5
GR
M_LIN_2
0.35
GR
1
X558*5B
2
M81*1B
M81
Radiator shutter drive unit
M_LIN_2
0.5
GR
X328*1V
X328*1V
M_LIN_2
0.5
GR
M_LIN_2
0.5
GR
1
B110*1B
B110
Intelligent battery sensor
12
A46*1B
A46
Digital Motor Electronics

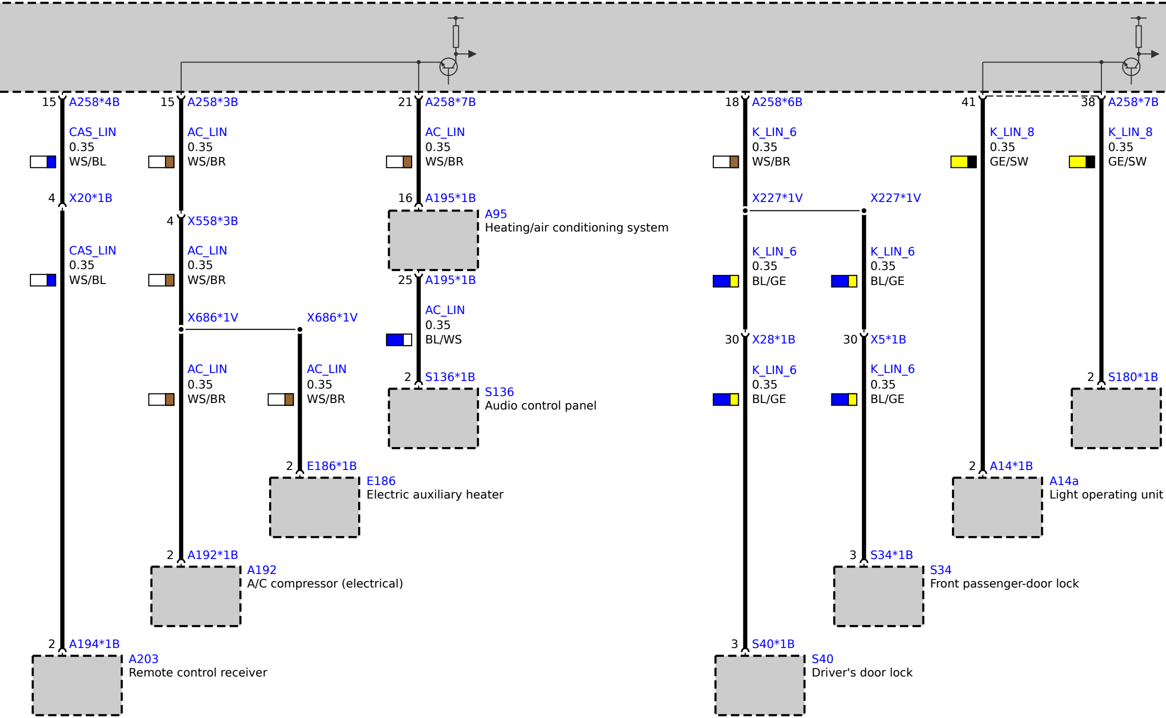
15 A258*4B
CAS_LIN 0.35 WS/BL
4 X20*1B
CAS_LIN 0.35 WS/BL
2 A194*1B
A203 Remote control receiver
15 A258*3B
AC_LIN 0.35 WS/BR
4 X558*3B
AC_LIN 0.35 WS/BR
X686*1V
X686*1V
AC_LIN 0.35 WS/BR
AC_LIN 0.35 WS/BR
2 A192*1B
A192 A/C compressor (electrical)
2 E186*1B
E186 Electric auxiliary heater
21 A258*7B
AC_LIN 0.35 WS/BR
16 A195*1B
A95 Heating/air conditioning system
25 A195*1B
AC_LIN 0.35 BL/WS
2 S136*1B
S136 Audio control panel
18 A258*6B
K_LIN_6 0.35 WS/BR
X227*1V
X227*1V
K_LIN_6 0.35 BL/GE
K_LIN_6 0.35 BL/GE
30 X28*1B
30 X5*1B
K_LIN_6 0.35 BL/GE
K_LIN_6 0.35 BL/GE
3 S40*1B
S40 Driver's door lock
3 S34*1B
S34 Front passenger-door lock
41
38 A258*7B
K_LIN_8 0.35 GE/SW
K_LIN_8 0.35 GE/SW
2 A14*1B
A14a Light operating unit
2 S180*1B

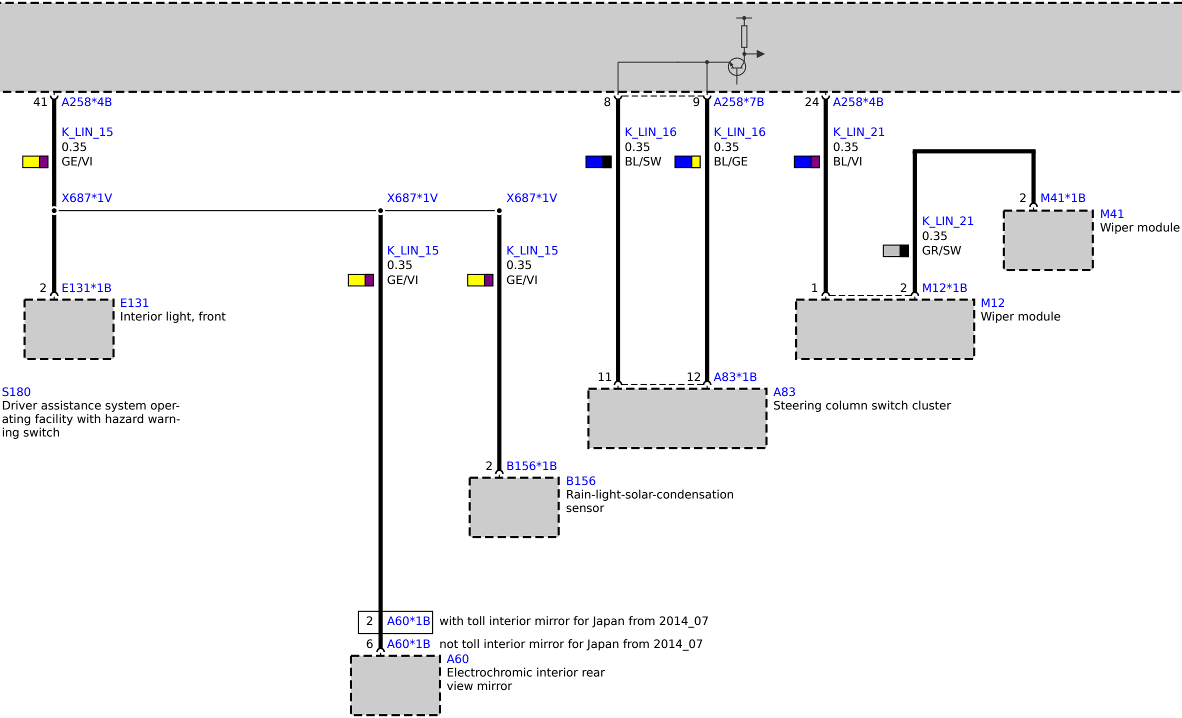
41
A258*4B
K_LIN_15
0.35
GE/VI
X687*1V
X687*1V
X687*1V
K_LIN_15
0.35
GE/VI
K_LIN_15
0.35
GE/VI
2
E131*1B
E131
Interior light, front
S180
Driver assistance system operating facility with hazard warning switch
8
9
A258*7B
K_LIN_16
0.35
BL/SW
K_LIN_16
0.35
BL/GE
24
A258*4B
K_LIN_21
0.35
BL/VI
K_LIN_21
0.35
GR/SW
2
M41*1B
M41
Wiper module
1
2
M12*1B
M12
Wiper module
11
12
A83*1B
A83
Steering column switch cluster
2
B156*1B
B156
Rain-light-solar-condensation sensor
2
A60*1B
with toll interior mirror for Japan from 2014_07
6
A60*1B
not toll interior mirror for Japan from 2014_07
A60
Electrochromic interior rear view mirror

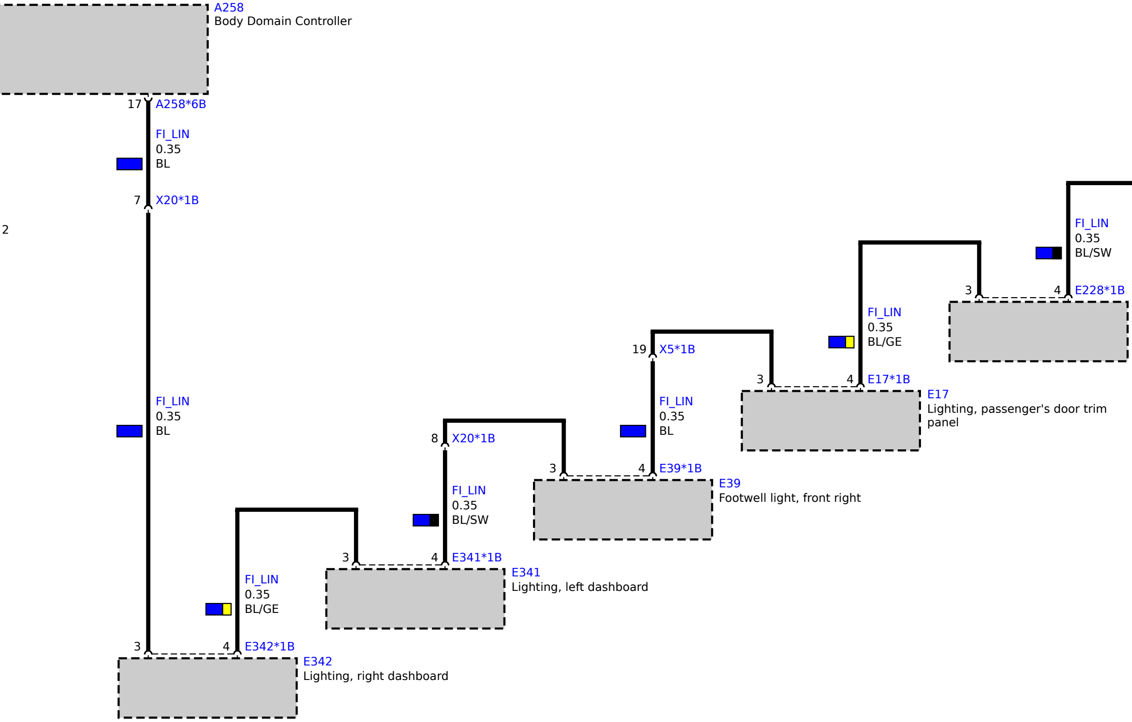
A258
Body Domain Controller
17
A258*6B
FI_LIN
0.35
BL
7
X20*1B
2
FI_LIN
0.35
BL
FI_LIN
0.35
BL/SW
3
4
E228*1B
FI_LIN
0.35
BL/GE
19
X5*1B
3
4
E17*1B
E17
Lighting, passenger's door trim panel
FI_LIN
0.35
BL
8
X20*1B
3
4
E39*1B
E39
Footwell light, front right
FI_LIN
0.35
BL/SW
3
4
E341*1B
E341
Lighting, left dashboard
FI_LIN
0.35
BL/GE
3
4
E342*1B
E342
Lighting, right dashboard

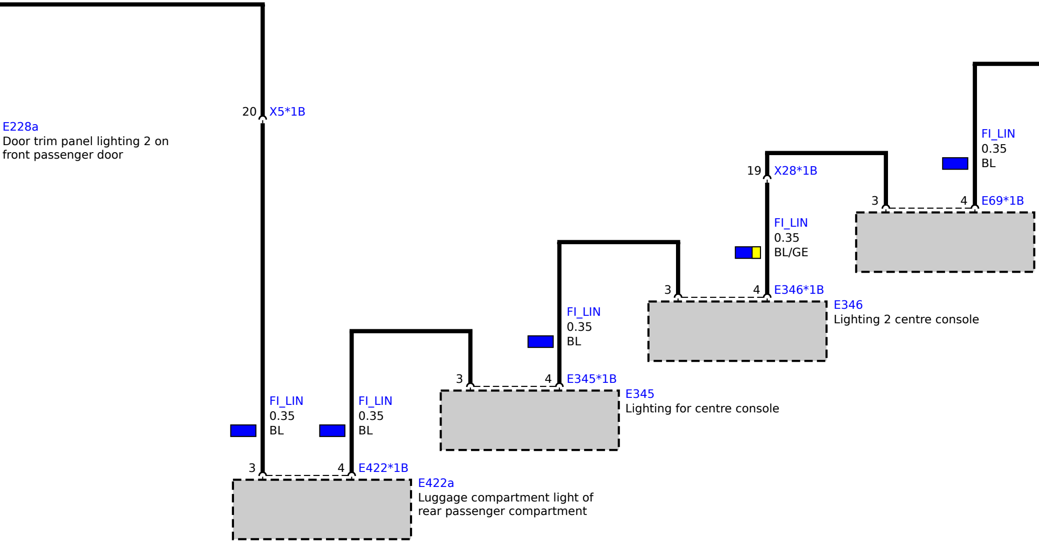
20
X5*1B
E228a
Door trim panel lighting 2 on front passenger door
19
X28*1B
FI_LIN
0.35
BL
3
4
E69*1B
FI_LIN
0.35
BL/GE
3
4
E346*1B
E346
Lighting 2 centre console
FI_LIN
0.35
BL
3
4
E345*1B
E345
Lighting for centre console
FI_LIN
0.35
BL
FI_LIN
0.35
BL
3
4
E422*1B
E422a
Luggage compartment light of rear passenger compartment

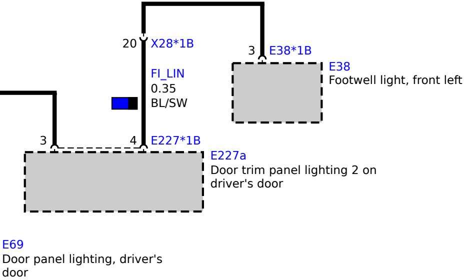
20
X28*1B
3
E38*1B
E38
Footwell light, front left
FI_LIN
0.35
BL/SW
3
4
E227*1B
E227a
Door trim panel lighting 2 on driver's door
E69
Door panel lighting, driver's door