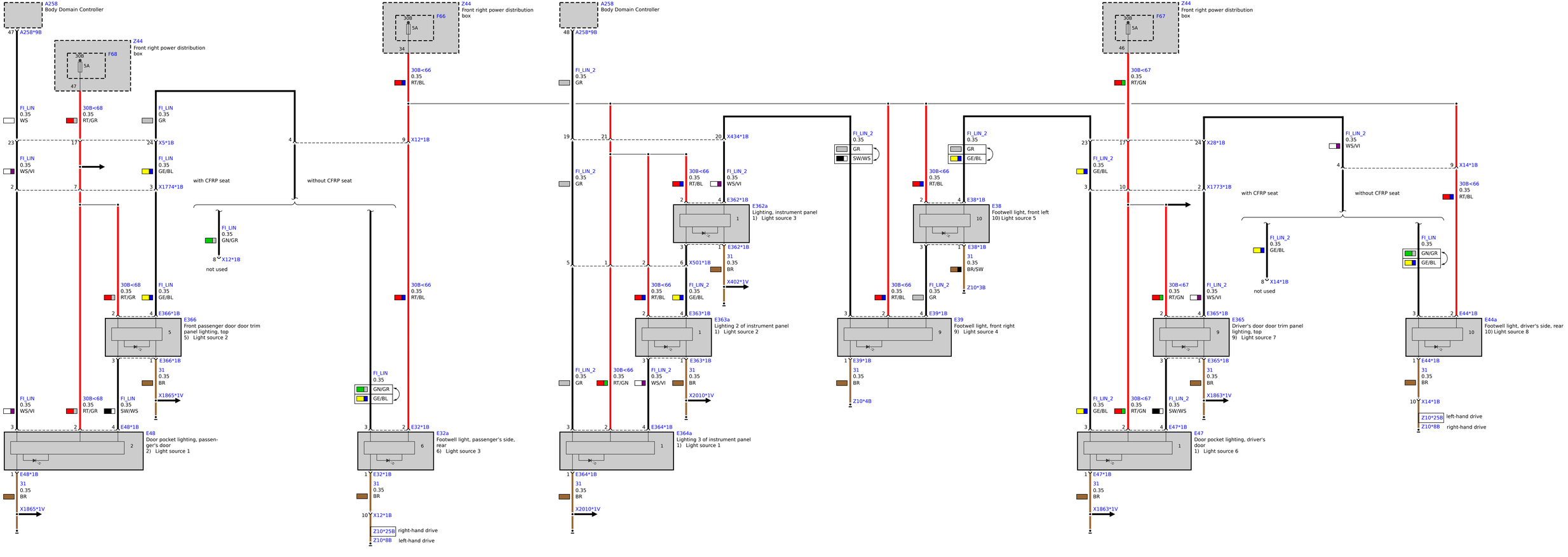
A258
Body Domain Controller
47
A258*9B
Z44
Front right power distribution box
F68
30B
5A
47
FI_LIN
0.35
WS
30B<68
0.35
RT/GR
FI_LIN
0.35
GR
23
17
24
X5*1B
FI_LIN
0.35
WS/VI
FI_LIN
0.35
GE/BL
2
7
3
X1774*1B
with CFRP seat
without CFRP seat
FI_LIN
0.35
GN/GR
8
X12*1B
not used
30B<68
0.35
RT/GR
FI_LIN
0.35
GE/BL
2
4
E366*1B
E366
Front passenger door door trim panel lighting, top
5) Light source 2
3
1
E366*1B
31
0.35
BR
X1865*1V
FI_LIN
0.35
WS/VI
30B<68
0.35
RT/GR
FI_LIN
0.35
SW/WS
3
2
4
E48*1B
E48
Door pocket lighting, passenger's door
2) Light source 1
1
E48*1B
31
0.35
BR
X1865*1V
Z44
Front right power distribution box
F66
30B
5A
34
30B<66
0.35
RT/BL
9
X12*1B
30B<66
0.35
RT/BL
FI_LIN
0.35
GN/GR
GE/BL
3
2
E32*1B
E32a
Footwell light, passenger's side, rear
6) Light source 3
1
E32*1B
31
0.35
BR
10
X12*1B
Z10*25B right-hand drive
Z10*8B left-hand drive
A258
Body Domain Controller
48
A258*9B
FI_LIN_2
0.35
GR
19
21
20
X434*1B
FI_LIN_2
0.35
GR
30B<66
0.35
RT/BL
FI_LIN_2
0.35
WS/VI
2
4
E362*1B
E362a
Lighting, instrument panel
1) Light source 3
3
1
E362*1B
5
1
2
6
X501*1B
31
0.35
BR
X402*1V
30B<66
0.35
RT/BL
FI_LIN_2
0.35
GE/BL
2
4
E363*1B
E363a
Lighting 2 of instrument panel
1) Light source 2
3
1
E363*1B
31
0.35
BR
X2010*1V
FI_LIN_2
0.35
GR
30B<66
0.35
RT/GN
FI_LIN_2
0.35
WS/VI
3
2
4
E364*1B
E364a
Lighting 3 of instrument panel
1) Light source 1
1
E364*1B
31
0.35
BR
X2010*1V
FI_LIN_2
0.35
GR
SW/WS
FI_LIN_2
0.35
GR
GE/BL
30B<66
0.35
RT/BL
2
4
E38*1B
E38
Footwell light, front left
10) Light source 5
3
1
E38*1B
31
0.35
BR/SW
Z10*3B
30B<66
0.35
RT/BL
FI_LIN_2
0.35
GR
3
2
4
E39*1B
E39
Footwell light, front right
9) Light source 4
1
E39*1B
31
0.35
BR
Z10*4B
Z44
Front right power distribution box
F67
30B
5A
46
30B<67
0.35
RT/GN
FI_LIN_2
0.35
GE/BL
23
17
24
X28*1B
FI_LIN_2
0.35
WS/VI
4
9
X14*1B
30B<66
0.35
RT/BL
3
10
2
X1773*1B
with CFRP seat
without CFRP seat
FI_LIN_2
0.35
GE/BL
8
X14*1B
not used
FI_LIN
0.35
GN/GR
GE/BL
30B<67
0.35
RT/GN
FI_LIN_2
0.35
WS/VI
2
4
E365*1B
E365
Driver's door door trim panel lighting, top
9) Light source 7
3
1
E365*1B
31
0.35
BR
X1863*1V
3
2
E44*1B
E44a
Footwell light, driver's side, rear
10) Light source 8
1
E44*1B
10
X14*1B
Z10*25B left-hand drive
Z10*8B right-hand drive
FI_LIN_2
0.35
GE/BL
30B<67
0.35
RT/GN
FI_LIN_2
0.35
SW/WS
3
2
4
E47*1B
E47
Door pocket lighting, driver's door
1) Light source 6
1
E47*1B
31
0.35
BR
X1863*1V