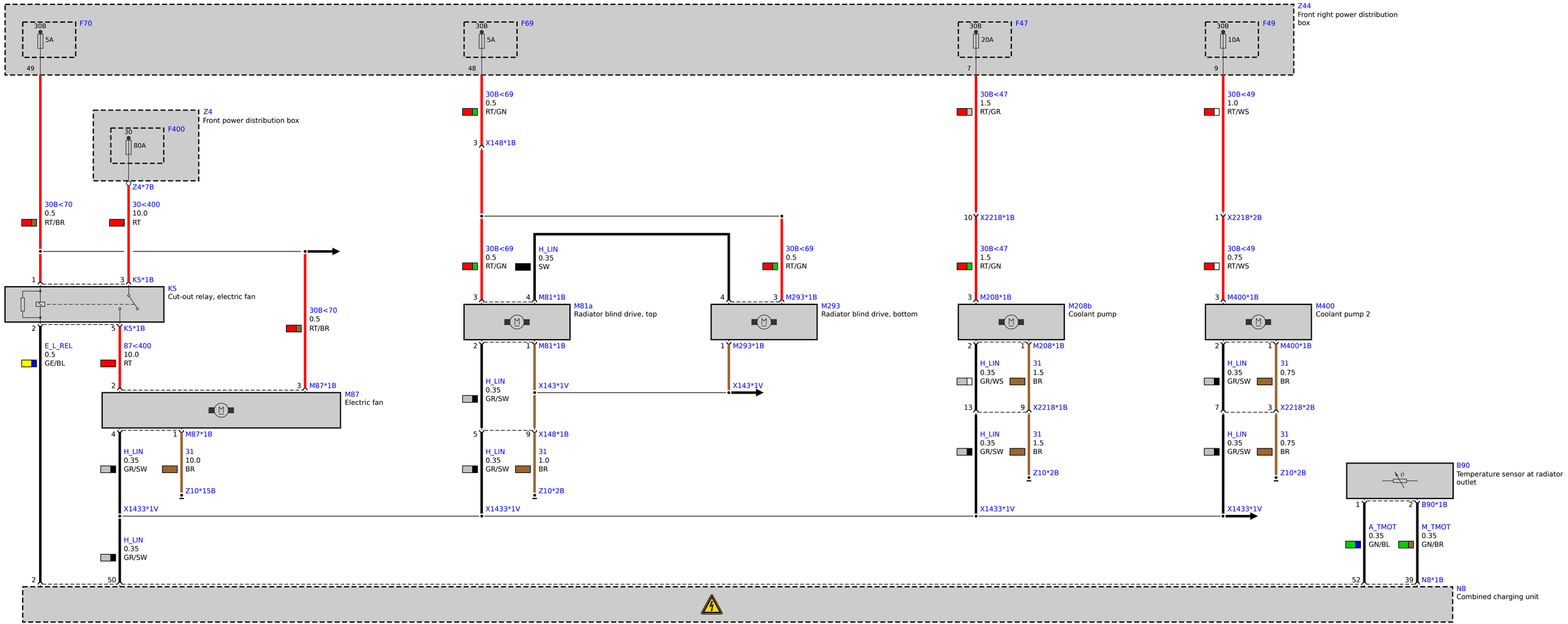
Z44
Front right power distribution box
30B
F70
5A
49
30B
F69
5A
48
30B
F47
20A
7
30B
F49
10A
9
Z4
Front power distribution box
30
F400
80A
Z4*7B
30B<70
0.5
RT/BR
30<400
10.0
RT
30B<69
0.5
RT/GN
3
X148*1B
30B<47
1.5
RT/GR
10
X2218*1B
30B<47
1.5
RT/GN
30B<49
1.0
RT/WS
1
X2218*2B
30B<49
0.75
RT/WS
1
3
K5*1B
K5
Cut-out relay, electric fan
2
5
K5*1B
E_L_REL
0.5
GE/BL
87<400
10.0
RT
30B<70
0.5
RT/BR
2
3
M87*1B
M87
Electric fan
4
1
M87*1B
H_LIN
0.35
GR/SW
31
10.0
BR
Z10*15B
X1433*1V
H_LIN
0.35
GR/SW
2
50
30B<69
0.5
RT/GN
H_LIN
0.35
SW
3
4
M81*1B
M81a
Radiator blind drive, top
2
1
M81*1B
H_LIN
0.35
GR/SW
X143*1V
5
9
X148*1B
H_LIN
0.35
GR/SW
31
1.0
BR
Z10*2B
X1433*1V
30B<69
0.5
RT/GN
4
3
M293*1B
M293
Radiator blind drive, bottom
1
M293*1B
X143*1V
3
M208*1B
M208b
Coolant pump
2
1
M208*1B
H_LIN
0.35
GR/WS
31
1.5
BR
13
9
X2218*1B
H_LIN
0.35
GR/SW
31
1.5
BR
Z10*2B
X1433*1V
3
M400*1B
M400
Coolant pump 2
2
1
M400*1B
H_LIN
0.35
GR/SW
31
0.75
BR
7
3
X2218*2B
H_LIN
0.35
GR/SW
31
0.75
BR
Z10*2B
X1433*1V
B90
Temperature sensor at radiator outlet
1
2
B90*1B
A_TMOT
0.35
GN/BL
M_TMOT
0.35
GN/BR
52
39
N8*1B
N8
Combined charging unit