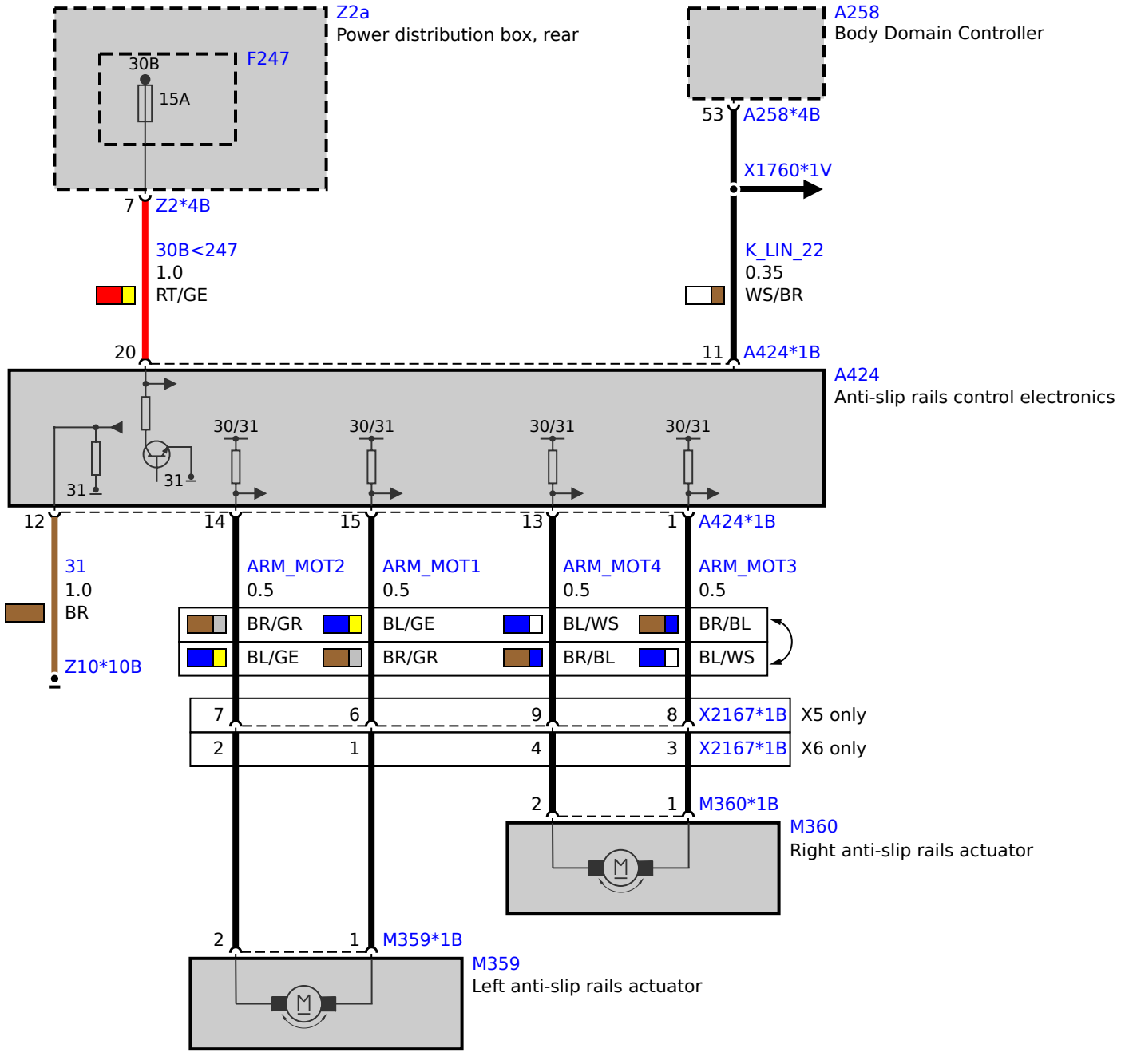
Z2a
Power distribution box, rear
F247
30B
15A
7
Z2*4B
30B<247
1.0
RT/GE
20
A258
Body Domain Controller
53
A258*4B
X1760*1V
K_LIN_22
0.35
WS/BR
11
A424*1B
A424
Anti-slip rails control electronics
30/31
30/31
30/31
30/31
31
31
12
14
15
13
1
A424*1B
31
1.0
BR
Z10*10B
ARM_MOT2
0.5
ARM_MOT1
0.5
ARM_MOT4
0.5
ARM_MOT3
0.5
BR/GR
BL/GE
BL/WS
BR/BL
BL/GE
BR/GR
BR/BL
BL/WS
7
6
9
8
X2167*1B
X5 only
2
1
4
3
X2167*1B
X6 only
2
1
M360*1B
M360
Right anti-slip rails actuator
2
1
M359*1B
M359
Left anti-slip rails actuator