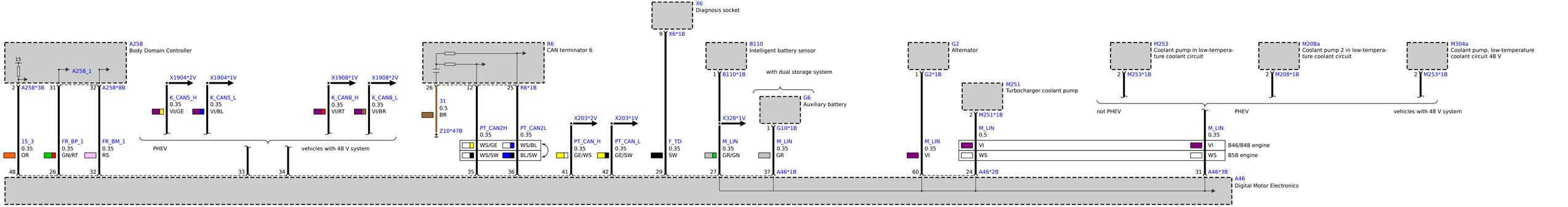
A258
Body Domain Controller
15
A258_1
2 A258*3B
31
32 A258*8B
15_3
0.35
OR
48
FR_BP_1
0.35
GN/RT
26
FR_BM_1
0.35
RS
32
X1904*2V
K_CAN5_H
0.35
VI/GE
X1904*1V
K_CAN5_L
0.35
VI/BL
PHEV
33
34
vehicles with 48 V system
X1908*1V
K_CAN8_H
0.35
VI/RT
X1908*2V
K_CAN8_L
0.35
VI/BR
R6
CAN terminator 6
26
12
25 R6*1B
31
0.5
BR
Z10*47B
PT_CAN2H
0.35
WS/GE
WS/SW
35
PT_CAN2L
0.35
WS/BL
BL/SW
36
X203*2V
PT_CAN_H
0.35
GE/WS
41
X203*1V
PT_CAN_L
0.35
GE/SW
42
X6
Diagnosis socket
9 X6*1B
F_TD
0.35
SW
29
B110
Intelligent battery sensor
1 B110*1B
X328*1V
M_LIN
0.35
GR/GN
27
with dual storage system
G6
Auxiliary battery
1 G10*1B
M_LIN
0.35
GR
37 A46*1B
G2
Alternator
1 G2*1B
M_LIN
0.35
VI
60
M251
Turbocharger coolant pump
2 M251*1B
M_LIN
0.5
VI
WS
B46/B48 engine
B58 engine
24 A46*2B
M_LIN
0.35
VI
WS
31 A46*3B
M253
Coolant pump in low-tempera-
ture coolant circuit
2 M253*1B
M208a
Coolant pump 2 in low-tempera-
ture coolant circuit
2 M208*1B
M304a
Coolant pump, low-temperature
coolant circuit 48 V
2 M253*1B
not PHEV
PHEV
vehicles with 48 V system
A46
Digital Motor Electronics