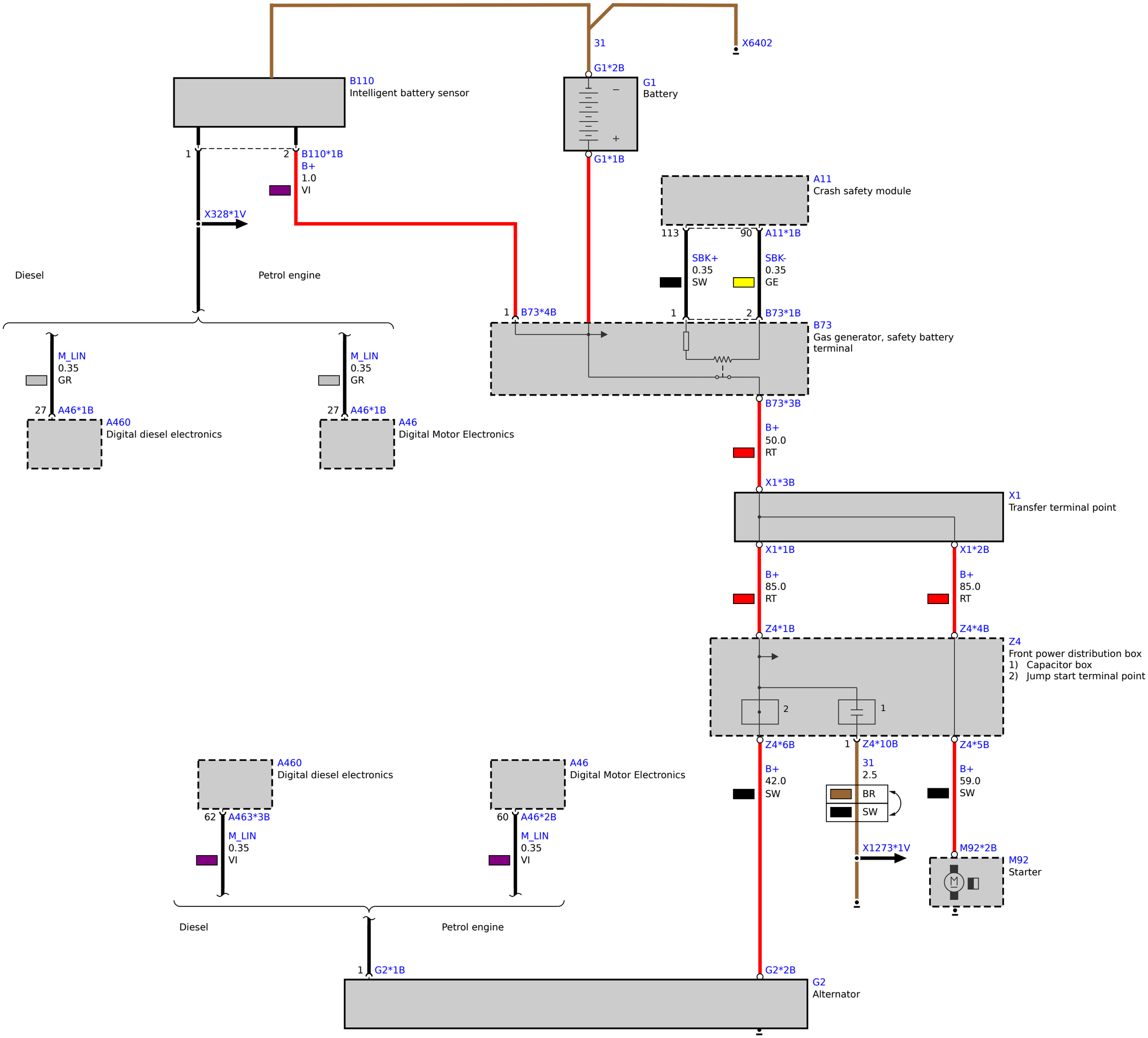
31
X6402
G1*2B
B110
Intelligent battery sensor
G1
Battery
1
2
B110*1B
B+
1.0
VI
G1*1B
A11
Crash safety module
X328*1V
113
90
A11*1B
SBK+
0.35
SW
SBK-
0.35
GE
Diesel
Petrol engine
1
B73*4B
1
2
B73*1B
B73
Gas generator, safety battery terminal
M_LIN
0.35
GR
M_LIN
0.35
GR
27
A46*1B
27
A46*1B
A460
Digital diesel electronics
A46
Digital Motor Electronics
B73*3B
B+
50.0
RT
X1*3B
X1
Transfer terminal point
X1*1B
X1*2B
B+
85.0
RT
B+
85.0
RT
Z4*1B
Z4*4B
Z4
Front power distribution box
1) Capacitor box
2) Jump start terminal point
2
1
Z4*6B
1
Z4*10B
Z4*5B
A460
Digital diesel electronics
A46
Digital Motor Electronics
B+
42.0
SW
31
2.5
BR
SW
B+
59.0
SW
62
A463*3B
60
A46*2B
M_LIN
0.35
VI
M_LIN
0.35
VI
X1273*1V
M92*2B
M92
Starter
Diesel
Petrol engine
1
G2*1B
G2*2B
G2
Alternator