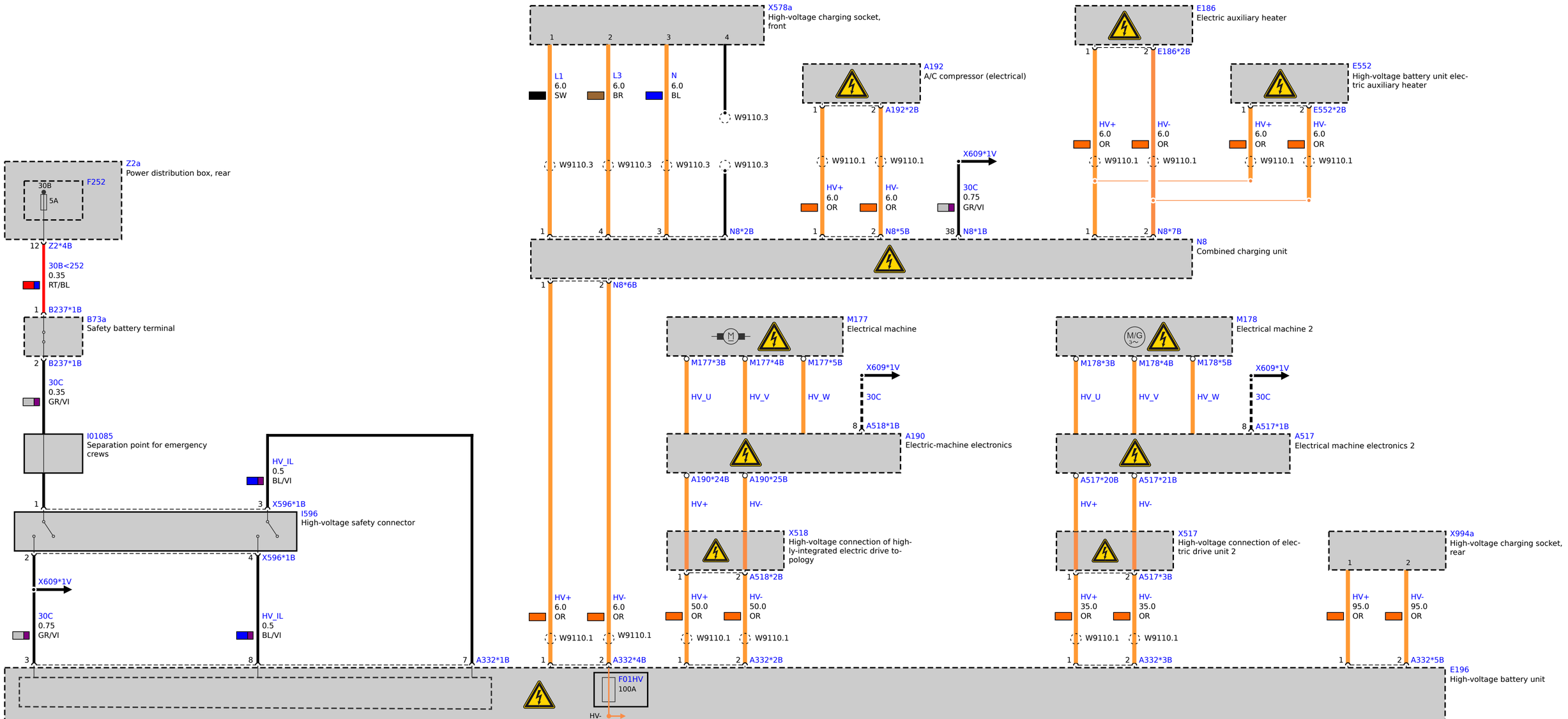
X578a
High-voltage charging socket, front
L1
6.0
SW
L3
6.0
BR
N
6.0
BL
W9110.3
W9110.3
W9110.3
W9110.3
W9110.3
N8*2B
A192
A/C compressor (electrical)
A192*2B
W9110.1
W9110.1
HV+
6.0
OR
HV-
6.0
OR
X609*1V
30C
0.75
GR/VI
N8*5B
N8*1B
E186
Electric auxiliary heater
E186*2B
HV+
6.0
OR
HV-
6.0
OR
W9110.1
W9110.1
N8*7B
E552
High-voltage battery unit electric auxiliary heater
E552*2B
HV+
6.0
OR
HV-
6.0
OR
W9110.1
W9110.1
N8
Combined charging unit
N8*6B
Z2a
Power distribution box, rear
F252
30B
5A
Z2*4B
30B<252
0.35
RT/BL
B237*1B
B73a
Safety battery terminal
B237*1B
30C
0.35
GR/VI
I01085
Separation point for emergency crews
HV_IL
0.5
BL/VI
X596*1B
I596
High-voltage safety connector
X596*1B
X609*1V
30C
0.75
GR/VI
HV_IL
0.5
BL/VI
A332*1B
M177
Electrical machine
M177*3B
M177*4B
M177*5B
HV_U
HV_V
HV_W
X609*1V
30C
A518*1B
A190
Electric-machine electronics
A190*24B
A190*25B
HV+
HV-
X518
High-voltage connection of highly-integrated electric drive topology
A518*2B
HV+
50.0
OR
HV-
50.0
OR
W9110.1
W9110.1
A332*2B
M178
Electrical machine 2
M178*3B
M178*4B
M178*5B
HV_U
HV_V
HV_W
X609*1V
30C
A517*1B
A517
Electrical machine electronics 2
A517*20B
A517*21B
HV+
HV-
X517
High-voltage connection of electric drive unit 2
A517*3B
HV+
35.0
OR
HV-
35.0
OR
W9110.1
W9110.1
A332*3B
X994a
High-voltage charging socket, rear
HV+
95.0
OR
HV-
95.0
OR
A332*5B
HV+
6.0
OR
HV-
6.0
OR
W9110.1
W9110.1
A332*4B
F01HV
100A
HV-
E196
High-voltage battery unit