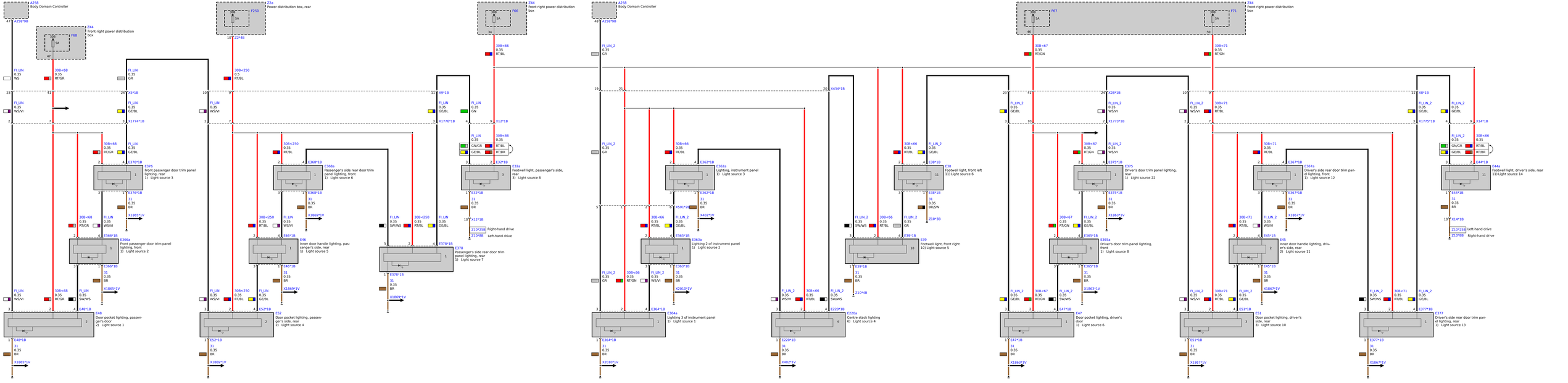
A258 Body Domain Controller
Z44 Front right power distribution box
F68 5A
F250 5A
Z3a Power distribution box, rear
F66 5A
F67 5A
F71 5A
Z22*4B
308<68 0.35 RT/GR
308<250 0.5 RT/BL
308<66 0.35 RT/BL
308<67 0.35 RT/GN
308<71 0.35 RT/BL
FI_LIN 0.35 WS
FI_LIN 0.35 WS/VI
FI_LIN 0.35 GR
FI_LIN 0.35 GE/BL
FI_LIN 0.35 SW/WS
FI_LIN 0.35 GN
FI_LIN_2 0.35 GR
FI_LIN_2 0.35 GE/BL
FI_LIN_2 0.35 WS/VI
FI_LIN_2 0.35 SW/WS
X9*1B
X12*1B
X14*1B
X28*1B
X40*1B
X434*1B
X1776*1B
X1773*1B
X1775*1B
GN/GR
GE/BL
RT/BL
RT/BR
E376 front passenger door trim panel lighting, rear 1) Light source 3
E366a front passenger door trim panel lighting, front 1) Light source 2
E48 Door pocket lighting, passenger's door 2) Light source 1
E368a Passenger's side rear door trim panel lighting, front 1) Light source 6
E46 Inner door handle lighting, passenger's side, rear 1) Light source 5
E52 Door pocket lighting, passenger's side, rear 2) Light source 4
E378 Passenger's side rear door trim panel lighting, rear 1) Light source 7
E32a Footwell light, passenger's side, rear 3) Light source 8
Z10*258 Left-hand drive
Z10*8B Right-hand drive
E362a Lighting, instrument panel 1) Light source 3
E363a Lighting 2 of instrument panel 1) Light source 2
E364a Lighting 3 of instrument panel 1) Light source 1
E38 Footwell light, front left 11) Light source 6
E39 Footwell light, front right 10) Light source 5
E220a Centre stack lighting 6) Light source 4
E375 Driver's door trim panel lighting, rear 1) Light source 22
E365a Driver's door trim panel lighting, front 1) Light source 8
E47 Door pocket lighting, driver's door 1) Light source 6
E367a Driver's side rear door trim panel lighting, front 1) Light source 12
E45 Inner door handle lighting, driver's side, rear 2) Light source 11
E51 Door pocket lighting, driver's side, rear 3) Light source 10
E377 Driver's side rear door trim panel lighting, rear 1) Light source 13
E44a Footwell light, driver's side, rear 11) Light source 14
X1869*1V
X1867*1V
X1863*1V
X602*1V
X2010*1V
X402*1V
Z10*3B
Z10*4B