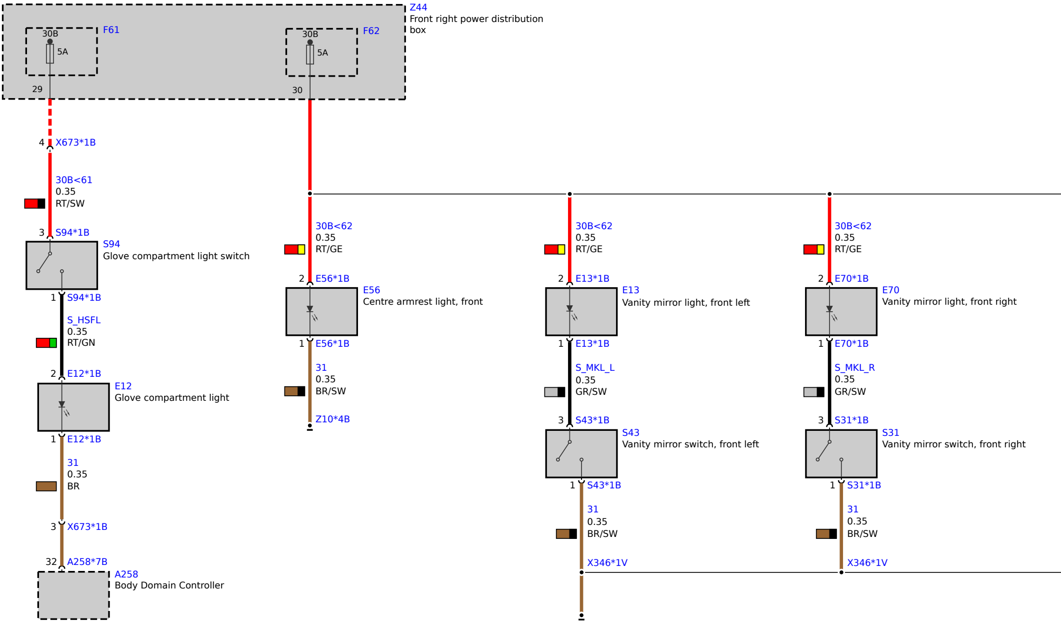
Z44
Front right power distribution box
F61
30B
5A
29
F62
30B
5A
30
4
X673*1B
30B<61
0.35
RT/SW
3
S94*1B
S94
Glove compartment light switch
1
S94*1B
S_HSFL
0.35
RT/GN
2
E12*1B
E12
Glove compartment light
1
E12*1B
31
0.35
BR
3
X673*1B
32
A258*7B
A258
Body Domain Controller
30B<62
0.35
RT/GE
2
E56*1B
E56
Centre armrest light, front
1
E56*1B
31
0.35
BR/SW
Z10*4B
30B<62
0.35
RT/GE
2
E13*1B
E13
Vanity mirror light, front left
1
E13*1B
S_MKL_L
0.35
GR/SW
3
S43*1B
S43
Vanity mirror switch, front left
1
S43*1B
31
0.35
BR/SW
X346*1V
30B<62
0.35
RT/GE
2
E70*1B
E70
Vanity mirror light, front right
1
E70*1B
S_MKL_R
0.35
GR/SW
3
S31*1B
S31
Vanity mirror switch, front right
1
S31*1B
31
0.35
BR/SW
X346*1V

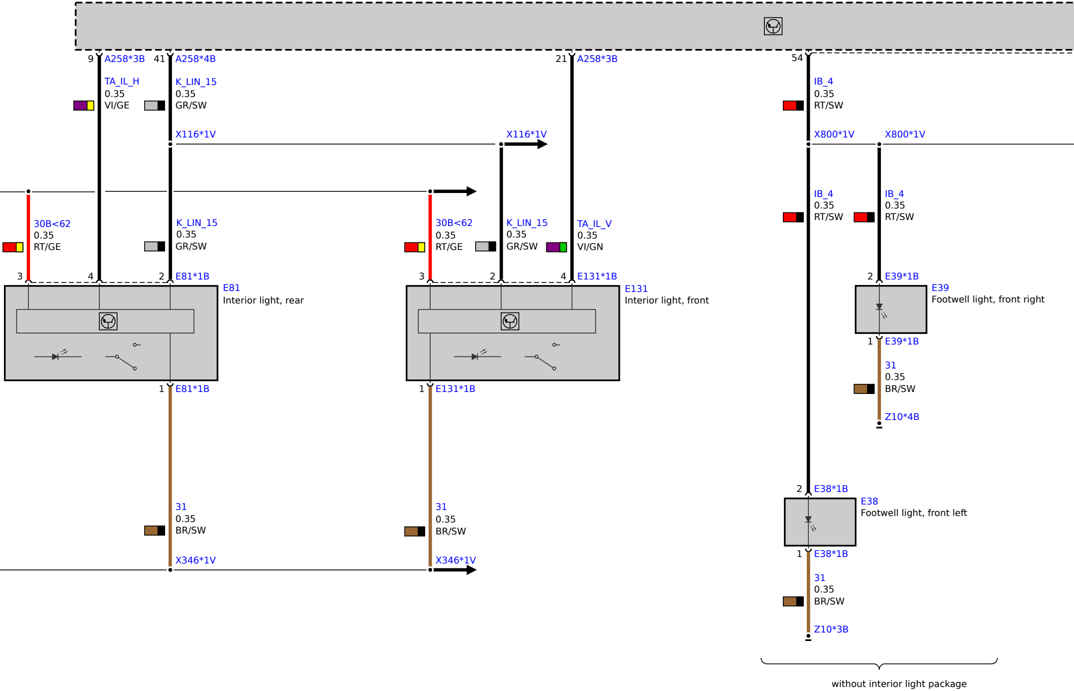
9 A258*3B
41 A258*4B
21 A258*3B
54
TA_IL_H
0.35
VI/GE
K_LIN_15
0.35
GR/SW
X116*1V
X116*1V
IB_4
0.35
RT/SW
X800*1V
X800*1V
30B<62
0.35
RT/GE
K_LIN_15
0.35
GR/SW
30B<62
0.35
RT/GE
K_LIN_15
0.35
GR/SW
TA_IL_V
0.35
VI/GN
IB_4
0.35
RT/SW
IB_4
0.35
RT/SW
3
4
2 E81*1B
E81
Interior light, rear
3
2
4 E131*1B
E131
Interior light, front
2 E39*1B
E39
Footwell light, front right
1 E39*1B
31
0.35
BR/SW
Z10*4B
1 E81*1B
1 E131*1B
31
0.35
BR/SW
31
0.35
BR/SW
X346*1V
X346*1V
2 E38*1B
E38
Footwell light, front left
1 E38*1B
31
0.35
BR/SW
Z10*3B
without interior light package

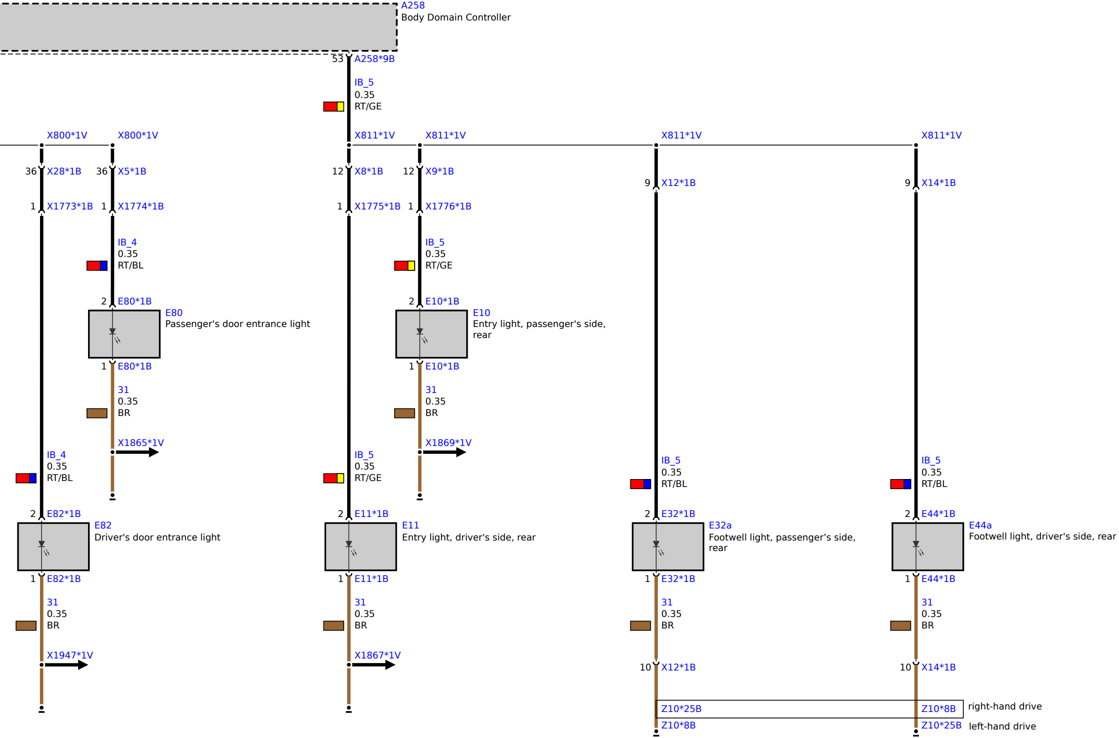
A258
Body Domain Controller
53 A258*9B
IB_5
0.35
RT/GE
X800*1V
X800*1V
X811*1V
X811*1V
X811*1V
X811*1V
36 X28*1B
36 X5*1B
12 X8*1B
12 X9*1B
9 X12*1B
9 X14*1B
1 X1773*1B
1 X1774*1B
1 X1775*1B
1 X1776*1B
IB_4
0.35
RT/BL
IB_5
0.35
RT/GE
2 E80*1B
E80
Passenger's door entrance light
1 E80*1B
2 E10*1B
E10
Entry light, passenger's side, rear
1 E10*1B
31
0.35
BR
31
0.35
BR
X1865*1V
X1869*1V
IB_4
0.35
RT/BL
IB_5
0.35
RT/GE
IB_5
0.35
RT/BL
IB_5
0.35
RT/BL
2 E82*1B
E82
Driver's door entrance light
1 E82*1B
2 E11*1B
E11
Entry light, driver's side, rear
1 E11*1B
2 E32*1B
E32a
Footwell light, passenger’s side, rear
1 E32*1B
2 E44*1B
E44a
Footwell light, driver's side, rear
1 E44*1B
31
0.35
BR
31
0.35
BR
31
0.35
BR
31
0.35
BR
X1947*1V
X1867*1V
10 X12*1B
10 X14*1B
Z10*25B
Z10*8B
right-hand drive
Z10*8B
Z10*25B
left-hand drive

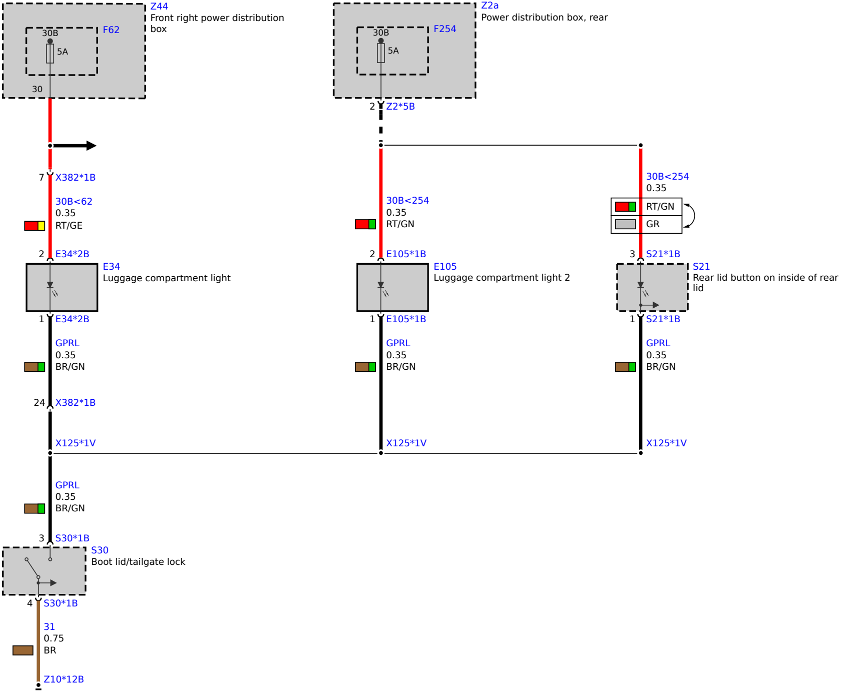
Z44
Front right power distribution box
F62
30B
5A
30
Z2a
Power distribution box, rear
F254
30B
5A
2
Z2*5B
7
X382*1B
30B<62
0.35
RT/GE
30B<254
0.35
RT/GN
30B<254
0.35
RT/GN
GR
2
E34*2B
E34
Luggage compartment light
2
E105*1B
E105
Luggage compartment light 2
3
S21*1B
S21
Rear lid button on inside of rear lid
1
E34*2B
1
E105*1B
1
S21*1B
GPRL
0.35
BR/GN
GPRL
0.35
BR/GN
GPRL
0.35
BR/GN
24
X382*1B
X125*1V
X125*1V
X125*1V
GPRL
0.35
BR/GN
3
S30*1B
S30
Boot lid/tailgate lock
4
S30*1B
31
0.75
BR
Z10*12B