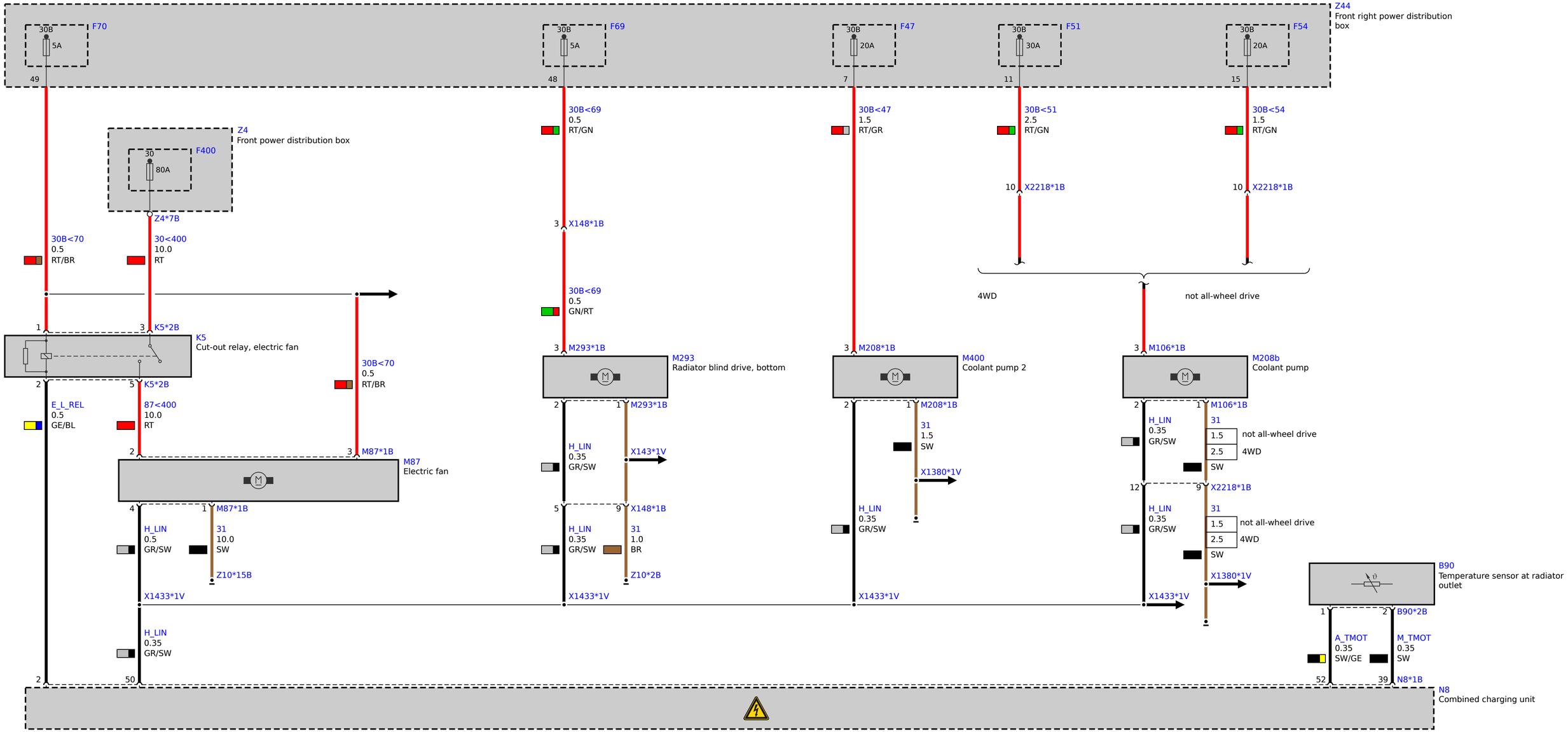
Z44
Front right power distribution box
30B
F70
5A
49
30B
F69
5A
48
30B
F47
20A
7
30B
F51
30A
11
30B
F54
20A
15
Z4
Front power distribution box
30
F400
80A
Z4*7B
30B<69
0.5
RT/GN
30B<47
1.5
RT/GR
30B<51
2.5
RT/GN
30B<54
1.5
RT/GN
10 X2218*1B
10 X2218*1B
3 X148*1B
30B<70
0.5
RT/BR
30<400
10.0
RT
30B<69
0.5
GN/RT
4WD
not all-wheel drive
1
3 K5*2B
K5
Cut-out relay, electric fan
2
5 K5*2B
30B<70
0.5
RT/BR
3 M293*1B
3 M208*1B
3 M106*1B
M293
Radiator blind drive, bottom
M400
Coolant pump 2
M208b
Coolant pump
E_L_REL
0.5
GE/BL
87<400
10.0
RT
2 M293*1B
1 M293*1B
2 M208*1B
1 M208*1B
2 M106*1B
1 M106*1B
H_LIN
0.35
GR/SW
X143*1V
31
1.5
SW
X1380*1V
31
1.5
not all-wheel drive
2.5
4WD
SW
2
3 M87*1B
M87
Electric fan
12
9 X2218*1B
4
1 M87*1B
H_LIN
0.5
GR/SW
31
10.0
SW
Z10*15B
5
9 X148*1B
H_LIN
0.35
GR/SW
31
1.0
BR
Z10*2B
H_LIN
0.35
GR/SW
31
1.5
not all-wheel drive
2.5
4WD
SW
X1380*1V
B90
Temperature sensor at radiator outlet
X1433*1V
X1433*1V
X1433*1V
X1433*1V
1
2 B90*2B
A_TMOT
0.35
SW/GE
M_TMOT
0.35
SW
H_LIN
0.35
GR/SW
2
50
52
39 N8*1B
N8
Combined charging unit