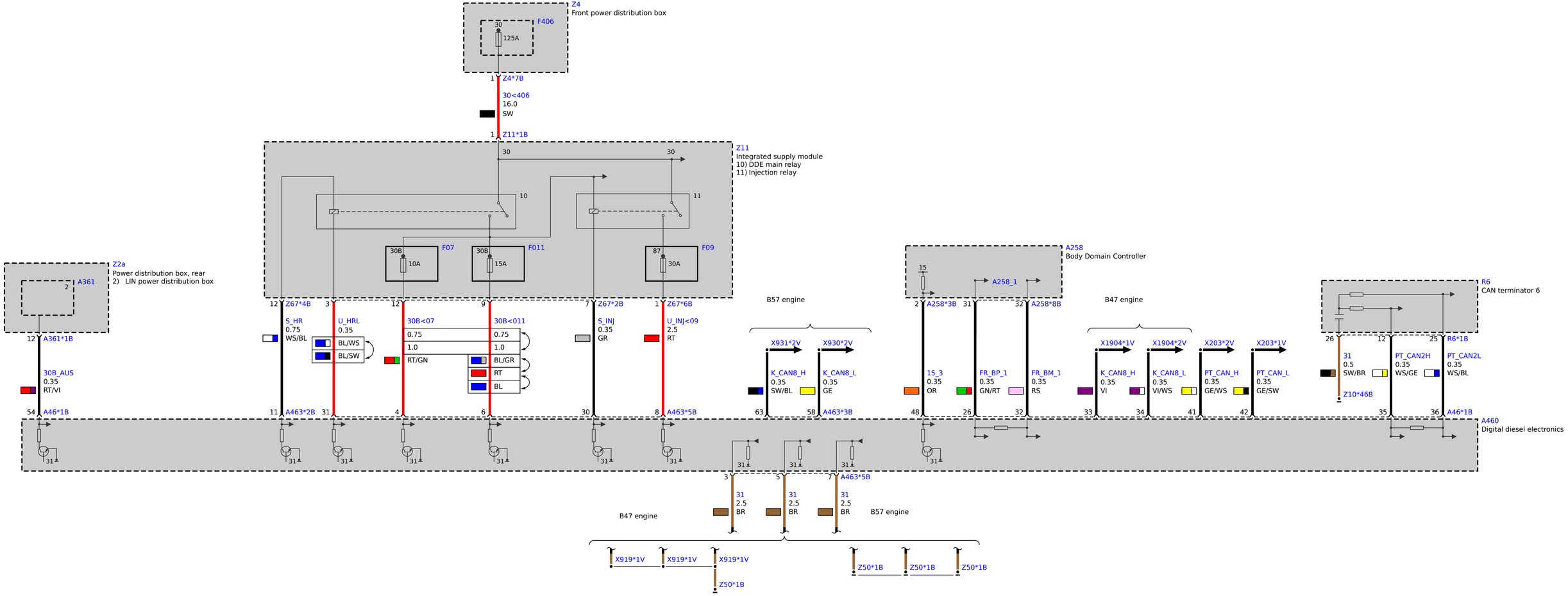
Z4
Front power distribution box
F406
30
125A
1
Z4*7B
30<406
16.0
SW
1
Z11*1B
Z11
Integrated supply module
10) DDE main relay
11) Injection relay
30
30
10
11
F07
30B
10A
F011
30B
15A
F09
87
30A
Z2a
Power distribution box, rear
2) LIN power distribution box
A361
2
12
A361*1B
30B_AUS
0.35
RT/VI
54
A46*1B
12
Z67*4B
S_HR
0.75
WS/BL
11
A463*2B
3
U_HRL
0.35
BL/WS
BL/SW
31
12
30B<07
0.75
1.0
RT/GN
4
9
30B<011
0.75
1.0
BL/GR
RT
BL
6
7
Z67*2B
S_INJ
0.35
GR
30
1
Z67*6B
U_INJ<09
2.5
RT
8
A463*5B
B57 engine
X931*2V
X930*2V
K_CAN8_H
0.35
SW/BL
K_CAN8_L
0.35
GE
63
58
A463*3B
A258
Body Domain Controller
15
A258_1
2
A258*3B
31
32
A258*8B
15_3
0.35
OR
48
FR_BP_1
0.35
GN/RT
26
FR_BM_1
0.35
RS
32
B47 engine
X1904*1V
X1904*2V
X203*2V
X203*1V
K_CAN8_H
0.35
VI
33
K_CAN8_L
0.35
VI/WS
34
PT_CAN_H
0.35
GE/WS
41
PT_CAN_L
0.35
GE/SW
42
R6
CAN terminator 6
26
12
25
31
0.5
SW/BR
Z10*46B
PT_CAN2H
0.35
WS/GE
PT_CAN2L
0.35
WS/BL
R6*1B
35
36
A46*1B
A460
Digital diesel electronics
31
3
5
7
A463*5B
31
2.5
BR
B47 engine
B57 engine
X919*1V
X919*1V
X919*1V
Z50*1B
Z50*1B
Z50*1B
Z50*1B