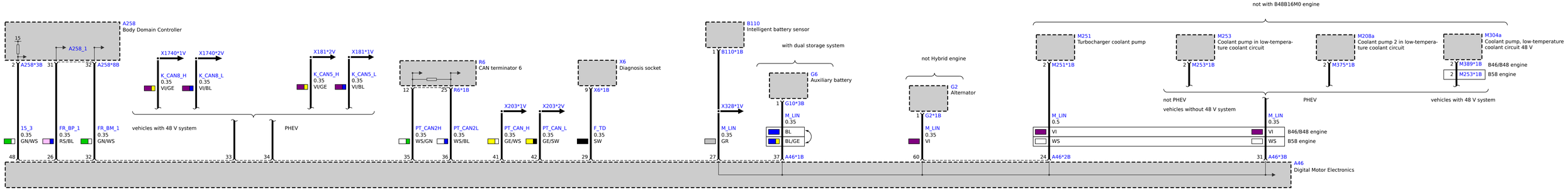
A258
Body Domain Controller
15
A258_1
2 A258*3B
31
32 A258*8B
15_3
0.35
GN/WS
48
FR_BP_1
0.35
RS/BL
26
FR_BM_1
0.35
GN/WS
32
X1740*1V
X1740*2V
K_CAN8_H
0.35
VI/GE
K_CAN8_L
0.35
VI/BL
vehicles with 48 V system
33
34
PHEV
X181*2V
X181*1V
K_CAN5_H
0.35
VI/GE
K_CAN5_L
0.35
VI/BL
R6
CAN terminator 6
12
25
R6*1B
PT_CAN2H
0.35
WS/GN
35
PT_CAN2L
0.35
WS/BL
36
X203*1V
X203*2V
PT_CAN_H
0.35
GE/WS
41
PT_CAN_L
0.35
GE/SW
42
X6
Diagnosis socket
9
X6*1B
F_TD
0.35
SW
29
B110
Intelligent battery sensor
1 B110*1B
X328*1V
M_LIN
0.35
GR
27
with dual storage system
G6
Auxiliary battery
1
G10*3B
M_LIN
0.35
BL
BL/GE
37
A46*1B
not Hybrid engine
G2
Alternator
1
G2*1B
M_LIN
0.35
VI
60
not with B48B16M0 engine
M251
Turbocharger coolant pump
2 M251*1B
M_LIN
0.5
VI
WS
24
A46*2B
M253
Coolant pump in low-tempera-
ture coolant circuit
2 M253*1B
not PHEV
vehicles without 48 V system
M208a
Coolant pump 2 in low-tempera-
ture coolant circuit
2 M375*1B
PHEV
M304a
Coolant pump, low-temperature
coolant circuit 48 V
2 M389*1B
B46/B48 engine
2 M253*1B
B58 engine
vehicles with 48 V system
M_LIN
0.35
VI
WS
B46/B48 engine
B58 engine
31
A46*3B
A46
Digital Motor Electronics