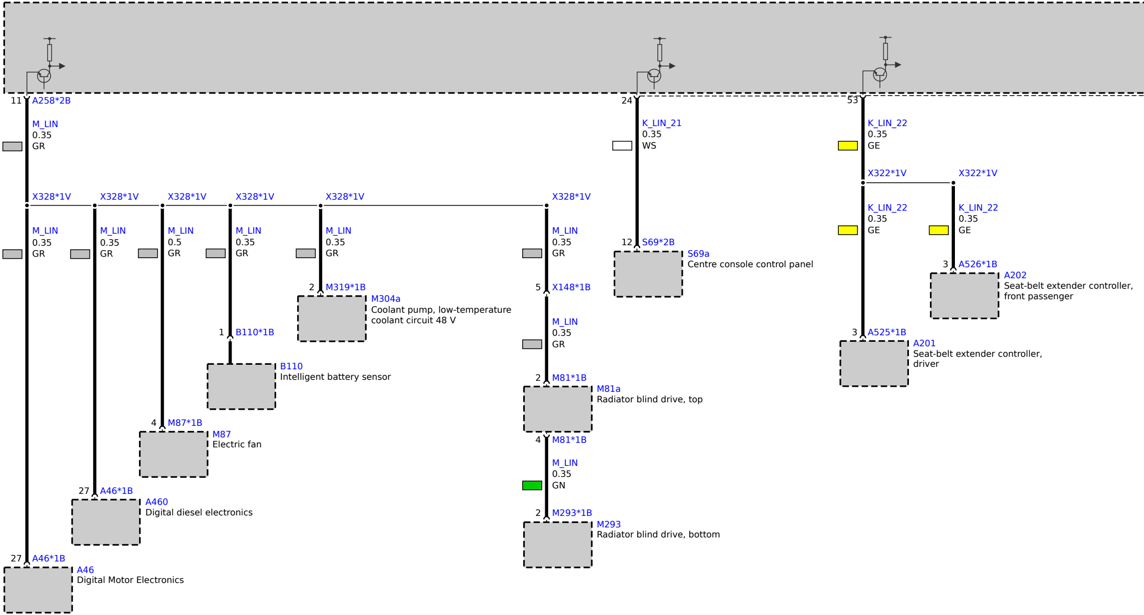
11
A258*2B
M_LIN
0.35
GR
X328*1V
M_LIN
0.35
GR
27
A46*1B
A46
Digital Motor Electronics
X328*1V
M_LIN
0.35
GR
27
A46*1B
A460
Digital diesel electronics
X328*1V
M_LIN
0.5
GR
4
M87*1B
M87
Electric fan
X328*1V
M_LIN
0.35
GR
1
B110*1B
B110
Intelligent battery sensor
X328*1V
M_LIN
0.35
GR
2
M319*1B
M304a
Coolant pump, low-temperature coolant circuit 48 V
X328*1V
M_LIN
0.35
GR
5
X148*1B
M_LIN
0.35
GR
2
M81*1B
M81a
Radiator blind drive, top
4
M81*1B
M_LIN
0.35
GN
2
M293*1B
M293
Radiator blind drive, bottom
24
K_LIN_21
0.35
WS
12
S69*2B
S69a
Centre console control panel
53
K_LIN_22
0.35
GE
X322*1V
K_LIN_22
0.35
GE
3
A525*1B
A201
Seat-belt extender controller, driver
X322*1V
K_LIN_22
0.35
GE
3
A526*1B
A202
Seat-belt extender controller, front passenger

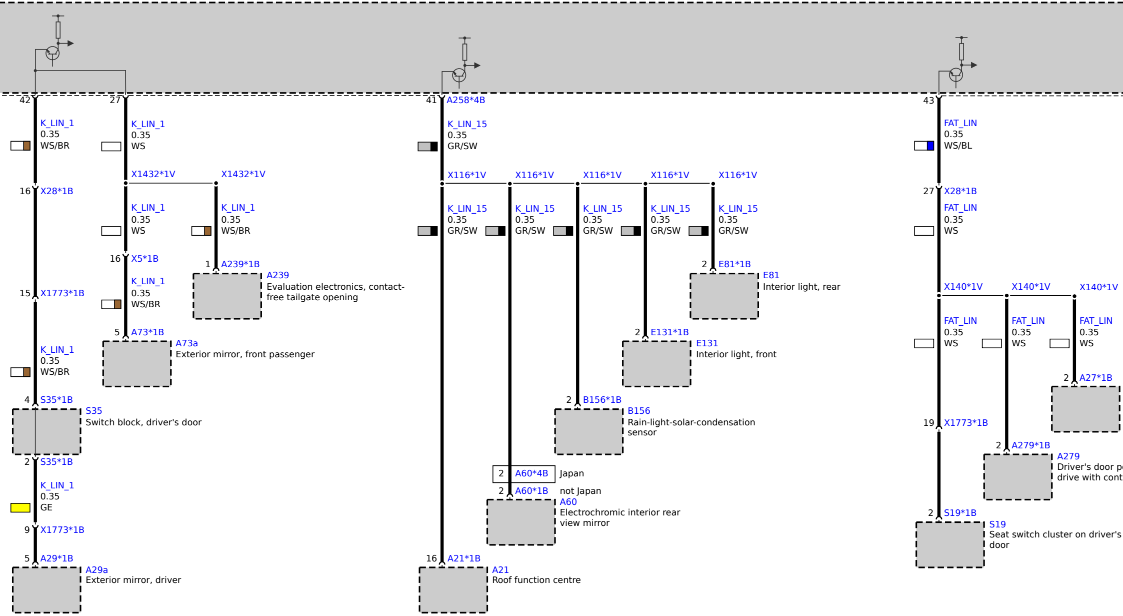
42
K_LIN_1
0.35
WS/BR
16 X28*1B
15 X1773*1B
K_LIN_1
0.35
WS/BR
4 S35*1B
S35
Switch block, driver's door
2 S35*1B
K_LIN_1
0.35
GE
9 X1773*1B
5 A29*1B
A29a
Exterior mirror, driver
27
K_LIN_1
0.35
WS
X1432*1V
X1432*1V
K_LIN_1
0.35
WS
16 X5*1B
K_LIN_1
0.35
WS/BR
5 A73*1B
A73a
Exterior mirror, front passenger
K_LIN_1
0.35
WS/BR
1 A239*1B
A239
Evaluation electronics, contact-free tailgate opening
41 A258*4B
K_LIN_15
0.35
GR/SW
X116*1V
X116*1V
X116*1V
X116*1V
X116*1V
K_LIN_15
0.35
GR/SW
K_LIN_15
0.35
GR/SW
K_LIN_15
0.35
GR/SW
K_LIN_15
0.35
GR/SW
K_LIN_15
0.35
GR/SW
2 E81*1B
E81
Interior light, rear
2 E131*1B
E131
Interior light, front
2 B156*1B
B156
Rain-light-solar-condensation sensor
2 A60*4B Japan
2 A60*1B not Japan
A60
Electrochromic interior rear view mirror
16 A21*1B
A21
Roof function centre
43
FAT_LIN
0.35
WS/BL
27 X28*1B
FAT_LIN
0.35
WS
X140*1V
X140*1V
X140*1V
FAT_LIN
0.35
WS
FAT_LIN
0.35
WS
FAT_LIN
0.35
WS
2 A27*1B
19 X1773*1B
2 A279*1B
A279
Driver's door p
drive with cont
2 S19*1B
S19
Seat switch cluster on driver's
door

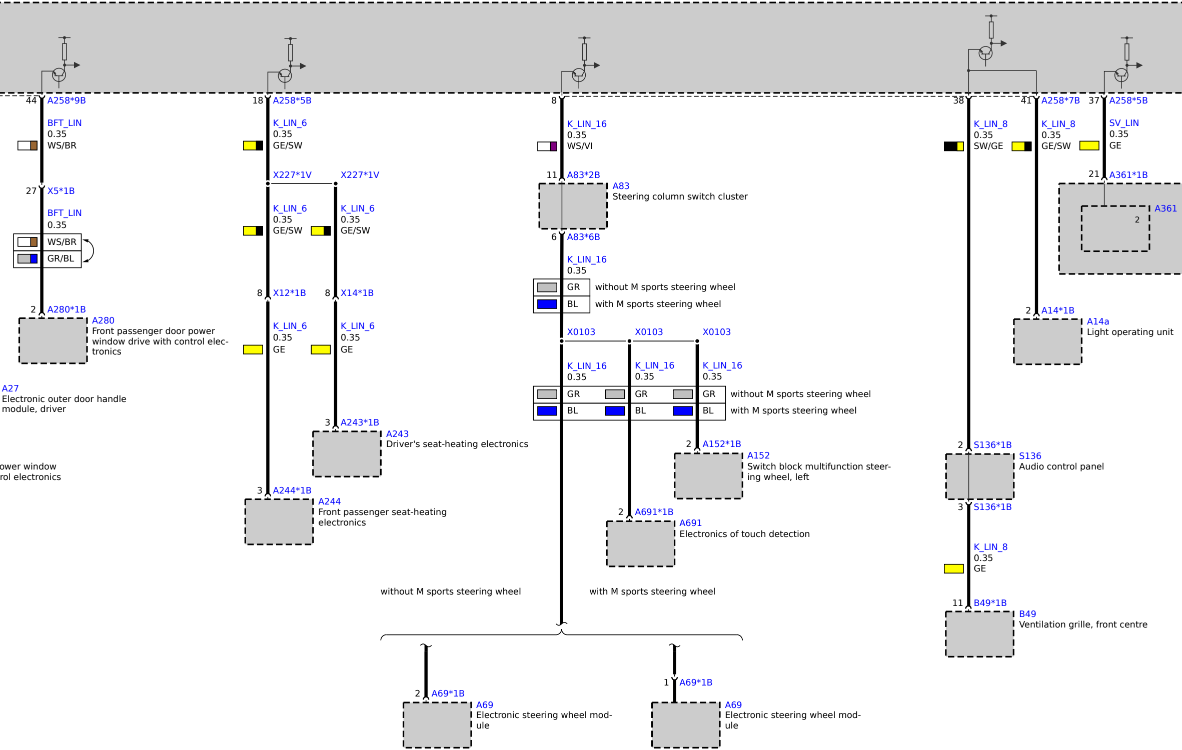
44
A258*9B
BFT_LIN
0.35
WS/BR
27
X5*1B
BFT_LIN
0.35
WS/BR
GR/BL
2
A280*1B
A280
Front passenger door power window drive with control electronics
A27
Electronic outer door handle module, driver
ower window
rol electronics
18
A258*5B
K_LIN_6
0.35
GE/SW
X227*1V
X227*1V
K_LIN_6
0.35
GE/SW
K_LIN_6
0.35
GE/SW
8
X12*1B
8
X14*1B
K_LIN_6
0.35
GE
K_LIN_6
0.35
GE
3
A243*1B
A243
Driver's seat-heating electronics
3
A244*1B
A244
Front passenger seat-heating electronics
8
K_LIN_16
0.35
WS/VI
11
A83*2B
A83
Steering column switch cluster
6
A83*6B
K_LIN_16
0.35
GR
without M sports steering wheel
BL
with M sports steering wheel
X0103
X0103
X0103
K_LIN_16
0.35
K_LIN_16
0.35
K_LIN_16
0.35
GR
GR
GR
without M sports steering wheel
BL
BL
BL
with M sports steering wheel
2
A152*1B
A152
Switch block multifunction steering wheel, left
2
A691*1B
A691
Electronics of touch detection
without M sports steering wheel
with M sports steering wheel
2
A69*1B
A69
Electronic steering wheel module
1
A69*1B
A69
Electronic steering wheel module
38
K_LIN_8
0.35
SW/GE
41
A258*7B
K_LIN_8
0.35
GE/SW
37
A258*5B
SV_LIN
0.35
GE
21
A361*1B
A361
2
2
A14*1B
A14a
Light operating unit
2
S136*1B
S136
Audio control panel
3
S136*1B
K_LIN_8
0.35
GE
11
B49*1B
B49
Ventilation grille, front centre

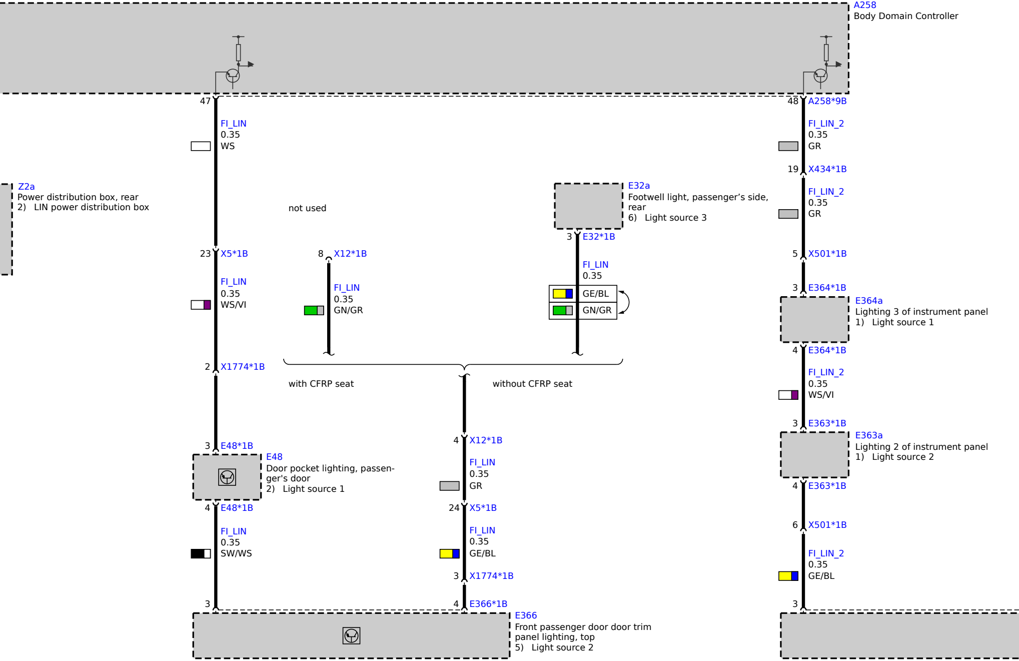
A258
Body Domain Controller
47
48
A258*9B
FI_LIN
0.35
WS
FI_LIN_2
0.35
GR
19
X434*1B
FI_LIN_2
0.35
GR
Z2a
Power distribution box, rear
2) LIN power distribution box
not used
E32a
Footwell light, passenger’s side, rear
6) Light source 3
3
E32*1B
23
X5*1B
8
X12*1B
5
X501*1B
FI_LIN
0.35
WS/VI
FI_LIN
0.35
GN/GR
FI_LIN
0.35
GE/BL
GN/GR
3
E364*1B
E364a
Lighting 3 of instrument panel
1) Light source 1
4
E364*1B
2
X1774*1B
with CFRP seat
without CFRP seat
FI_LIN_2
0.35
WS/VI
3
E363*1B
E363a
Lighting 2 of instrument panel
1) Light source 2
3
E48*1B
E48
Door pocket lighting, passenger's door
2) Light source 1
4
X12*1B
FI_LIN
0.35
GR
4
E48*1B
24
X5*1B
4
E363*1B
6
X501*1B
FI_LIN
0.35
SW/WS
FI_LIN
0.35
GE/BL
FI_LIN_2
0.35
GE/BL
3
X1774*1B
3
4
E366*1B
3
E366
Front passenger door door trim panel lighting, top
5) Light source 2

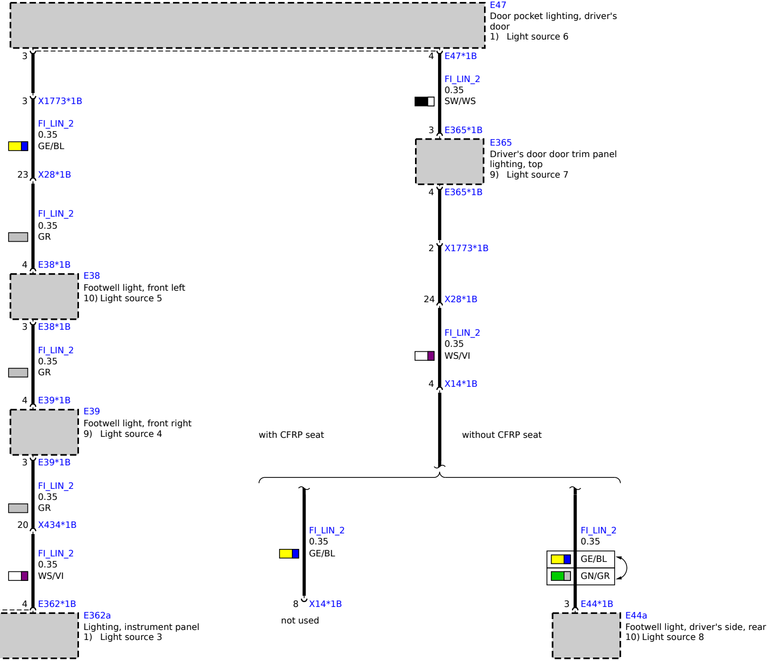
E47
Door pocket lighting, driver's door
1) Light source 6
3
4
E47*1B
FI_LIN_2
0.35
SW/WS
3
X1773*1B
FI_LIN_2
0.35
GE/BL
23
X28*1B
FI_LIN_2
0.35
GR
4
E38*1B
E38
Footwell light, front left
10) Light source 5
3
E38*1B
FI_LIN_2
0.35
GR
4
E39*1B
E39
Footwell light, front right
9) Light source 4
3
E39*1B
FI_LIN_2
0.35
GR
20
X434*1B
FI_LIN_2
0.35
WS/VI
4
E362*1B
E362a
Lighting, instrument panel
1) Light source 3
3
E365*1B
E365
Driver's door door trim panel lighting, top
9) Light source 7
4
E365*1B
2
X1773*1B
24
X28*1B
FI_LIN_2
0.35
WS/VI
4
X14*1B
with CFRP seat
without CFRP seat
FI_LIN_2
0.35
GE/BL
8
X14*1B
not used
FI_LIN_2
0.35
GE/BL
GN/GR
3
E44*1B
E44a
Footwell light, driver's side, rear
10) Light source 8